Seat No.: _____ Enrolment No._____

GUJARAT TECHNOLOGICAL UNIVERSITY

PDDC - SEMESTER–VII • EXAMINATION – SUMMER 2014

Subject Code: X71904 **Date: 05-06-2014**

Subject Name: Control Engineering

Time: 02.30 pm to 05.00 pm **Total Marks: 70**

Instructions:

1. **Attempt all questions.**
2. **Make suitable assumptions wherever necessary.**
3. **Figures to the right indicate full marks.**

Q.1	**(a)**	(i) List industrial applications of control system and describe any one of them.	**03**
		(ii)Explain the open and closed loop control system with suitable sketches. Also state the advantages and disadvantages of closed loop control systems.	**04**
	(b)	What is transfer function? List the important characteristics of the transfer function. Derive the transfer function of single-DoF spring-mass-damper system in usual notations.	**07**
Q.2	**(a)**	Define following terms in context with the transient response specifications of second order system using neat sketch: Delay time, Rise time, Peak time, Settling time, Maximum overshoot and Steady state error	**07**
	(b)	What is a signal flow graph? How signal flow graph differs with block diagram? Also state the properties of signal flow graph.	**07**
		OR	
	(b)	Reduce the block diagram shown in Figure 1. Also obtain the overall transfer function of the system.	**07**
Q.3	**(a)**	What is block diagram? State the advantages and disadvantages of the block diagram.	**07**
	(b)	Draw the signal flow graph from the block diagram shown in Figure 2. Using Masson's gain formula, obtain the transfer function.	**07**
		OR	
Q.3	**(a)**	What do you mean by the stability of the system? With suitable example, explain any one of the stability criterion.	**07**
	(b)	Using Routh criterion, discuss about the stability for the system whose characteristic equation is given as $s^6 + s^5 + 5s^4 + 3s^3 + 2s^2 - 4s - 8 = 0$.	**07**
Q.4	**(a)**	What is a programmable logic controller? Explain with sketch/es, the basic structure of programmable logic controller.	**07**
	(b)	Discuss about an on-off control action type automatic industrial controller with differential gap.	**07**
		OR	
Q.4	**(a)**	What is state-space equation of the physical system? Derive the state-space equation for a spring-mass-damper system in usual notations.	**07**
	(b)	Describe the proportional control action type automatic industrial controller with neat sketch.	**07**
Q.5	**(a)**	What are the characteristics of DC motors? Give the classification of DC motors and explain the working of one of the types of DC motor with sketch.	**07**
	(b)	What is a hydraulic system? List out the major components of the hydraulic system explaining any two of them.	**07**
		OR	
Q.5	**(a)**	Draw and explain detail block diagram of fuzzy logic controller.	**07**

(b) Discuss about the advantages and disadvantages of the hydraulic and pneumatic systems. **07**

****

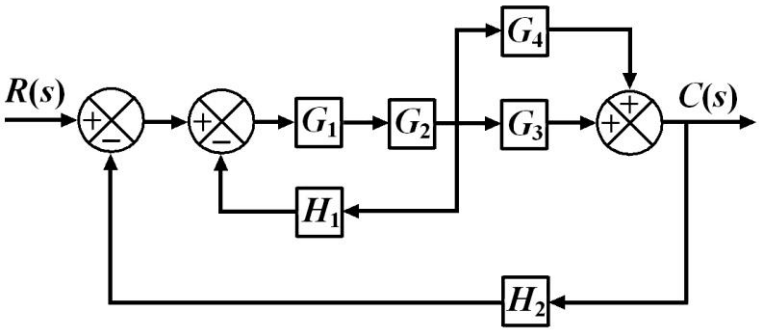

Figure 1, Q.2 (b)

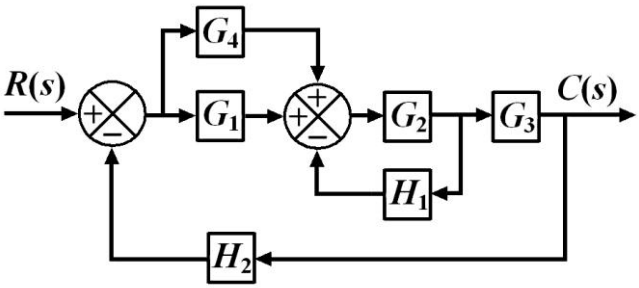

Figure 2, Q.3 (b)

****