Seat No.: _____ Enrolment No._____

GUJARAT TECHNOLOGICAL UNIVERSITY

PDDC - SEMESTER–III • EXAMINATION – SUMMER.2015

Subject Code: X30903 **Date: 03/06/2015**

Subject Name: CONTROL THEORY

Time:02.30pm-05.00pm **Total Marks: 70**

Instructions:

1. **Attempt all questions.**
2. **Make suitable assumptions wherever necessary.**
3. **Figures to the right indicate full marks.**

Q.1 **(a)** Mention different rules to reduce the block diagram to obtain transfer function (T.F.). Obtain the transfer function for the Fig. I using block diagram reduction technique. **07**

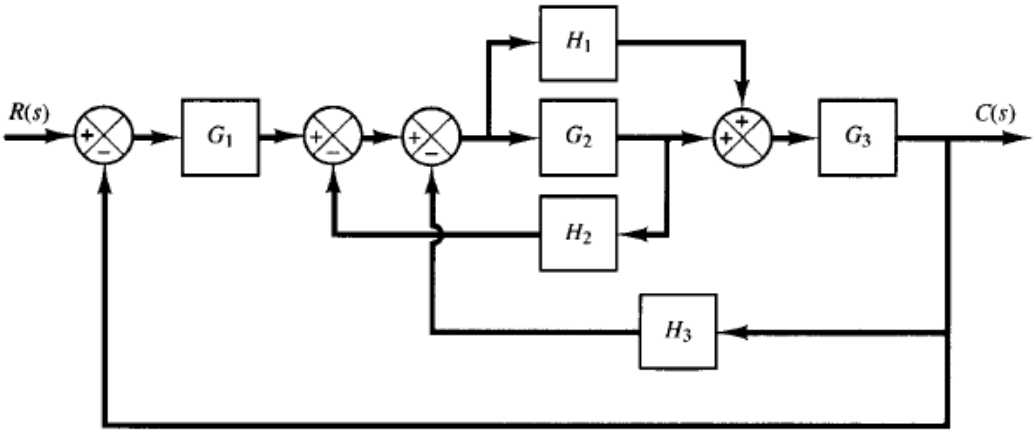

Fig. 1

(b) Discuss Routh Hurwitz criterion. Comment on results obtained by it. **07**

Q.2 **(a)** Explain Mason's gain formula for obtaining the overall gain of the system Obtain the T.F. of Fig. 1 using signal flow graph. **07**

(b) Draw the bode diagram for the following transfer function: $G_{(j\omega)} = \frac{10\,(j\omega+3)}{(j\omega)(j\omega+2)[(j\omega)^2+j\omega+2]}$ **07**

OR

(b) Derive equivalent electrical system for the mechanical system shown in Fig. 2 using force-voltage and force current analogy. **07**

Q.3 **(a)** Derive expressions for static error coefficients. How these coefficients are useful in determining steady state error? State the limitations of static error coefficient method. **07**

(b) What is root locus? For a unity feedback system $G_{(s)} = \frac{K}{s(s+2)}$. Draw movement of roots of characteristics equation as 'K' is varied. **07**

OR

Q.3 **(a)** The open loop transfer function of a unity feedback system is given by **07**

$$G_{(s)} = \frac{108}{s^2 \quad (s+4) \quad (s^2+3s+12)}$$

Find the static error coefficient and steady state error of the system when subjected to a n input given by $r(t) = 2 + 5t + 2t^2$

(b) Explain procedure to obtain (i) asymptotes (ii) centroid of asymptotes and (iii) breakaway points in root locus. Also explain significance of the root locus. **07**

Q.4 **(a)** State how type and order of control system is determined? Define steady state error and derive static error coefficients. **07**

(b) Distinguish minimum phase system and non minimum phase system with the help of example. **07**

OR

Q.4 **(a)** Show the locus of closed loop poles of a second order system as ζ is varied from 0 to ∞. **07**

(b) Obtain the transfer function (T.F.) of the mechanical system shown in Fig. 2. **07**

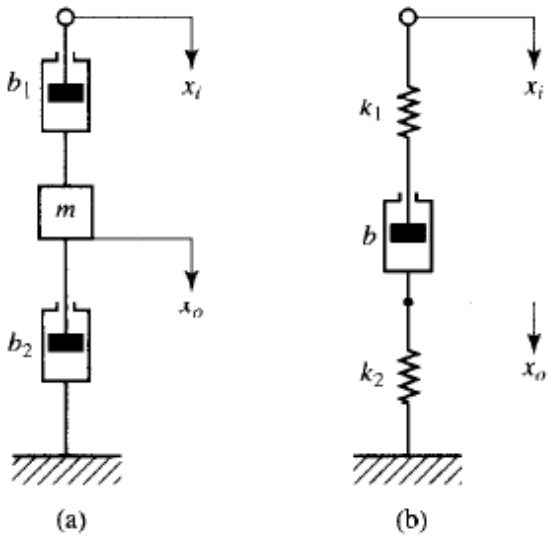

Fig. 2

Q.5 **(a)** Examine stability of given system using Routh's method. **07**

$$s^5 + 2s^4 + 3s^3 + 6s^2 + 2s + 1 = 0$$

(b) Explain Nyquist stability criterion. **07**

OR

Q.5 **(a)** How the order of the system effect the polar plot. Explain importance of polar plots. **07**

(b) Discuss effect of integral and derivative feedback action on the performance of the system. **07**

****