Seat No.: _____ *Enrolment No._____*

GUJARAT TECHNOLOGICAL UNIVERSITY

PDDC SEM-II Examination May 2012

Subject code: X20901

Subject Name: Circuit & Networks

Date: 23/05/2012 **Time: 10.30 am – 01.00 pm**

Total Marks: 70

Instructions:

1. **Attempt all questions.**
2. **Make suitable assumptions wherever necessary.**
3. **Figures to the right indicate full marks.**

Q.1	**(a)**	Define the following terms, (I) Link (II) Graph (III) Tree (IV) Node (V) Branch (VI) Super mesh (VII) Super node	**07**
	(b)	State and explain Maximum Power Transform Theorem when load is complex with variable resistance and fixed reactance.	**07**
Q.2	**(a)**	Derive the expression for Y-Parameters for the Parallel connection of 2-Two port Networks.	**07**
	(b)	Find the Z parameter of figure 1.	**07**
		OR	
	(b)	Find the Y parameter of figure 2.	**07**
Q.3	**(a)**	Explain the rules for source transformation technique.	**07**
	(b)	Find the current through 12 Ω resistor in the network of figure 3 using node analysis.	**07**
		OR	
Q.3	**(a)**	State and Explain Thevenin's Theorem with suitable example.	**07**
	(b)	Find the voltage V suing Superposition theorem of figure 4.	**07**
Q.4	**(a)**	Explain the concept of the complex frequency.	**07**
	(b)	Find the Thevenin's equivalent circuit of figure 5.	**07**
		OR	
Q.4	**(a)**	Draw the symbols of : Variac, Inductor, CCVS, VCCS, CCS, VCVS, variable capacitor.	**07**
	(b)	Explain in brief the concept of initial conditions.	**07**
Q.5	**(a)**	Prove AB-BC=1.	**07**
	(b)	Determine the current through 4 Ω resistor branch of network given in figure 6 using mesh analysis.	**07**
		OR	
Q.5	**(a)**	Classify various sources: CCVS, VCCS, CCCS, VCVS and explain in detail.	**07**
	(b)	Explain the cascade connection of two port networks.	**07**

****

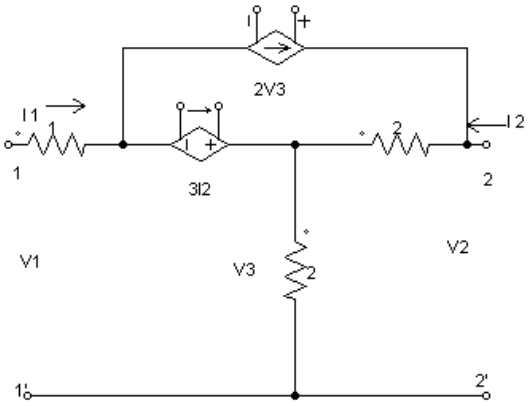

figure 1

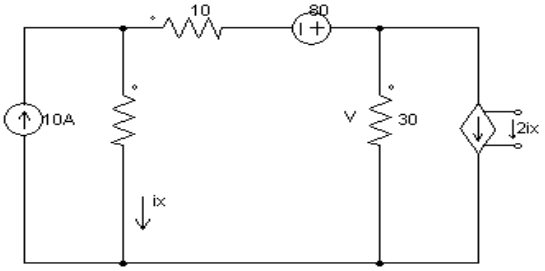

figure 4

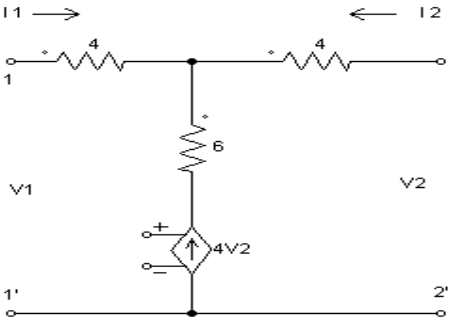

figure 2

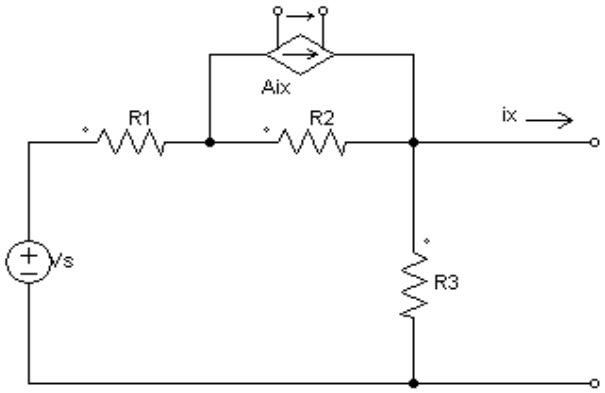

figure 5

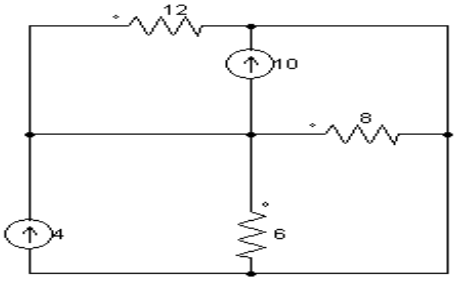

figure 3

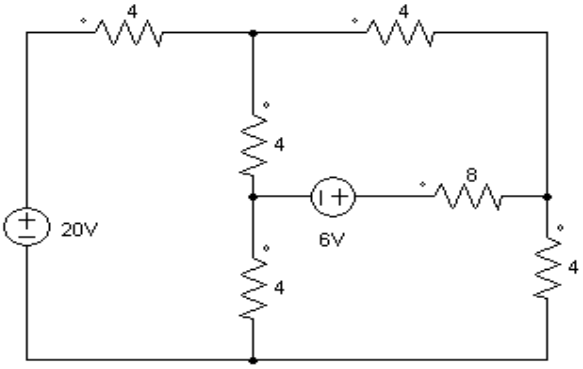

figure 6