Seat No.: _____ Enrolment No._____

GUJARAT TECHNOLOGICAL UNIVERSITY

PDDC– SEMESTER II– • EXAMINATION –WINTER- 2016

Subject Code: X20901 **Date:02/01/2017**

Subject Name: CIRCUIT & NETWORKS

Time:02:30 PM to 5:00 PM **Total Marks: 70**

Instructions:

1. **Attempt any five questions.**
2. **Make suitable assumptions wherever necessary.**
3. **Figures to the right indicate full marks.**

Q.1	**(a)**	Define Following Terms: (1) Tree (2)Mesh (3)Cut Set (4)Active Elements (5) Passive Elements (6) Bilateral Network(7) Dependant Source	**07**
	(b)	Explain Duality with Example.	**07**
Q.2	**(a)**	State and prove maximum power transfer theorem.	**07**
	(b)	For the Fig.1, the capacitor has an initial charge q_0=500µC with polarity as shown in fig. At t=0, the switch is closed, thereby applying the constant voltage V=50V.Find the current transient.	**07**
Q.3	**(a)**	Summarize significance of pole-zero location in S-plane.	**07**
	(b)	In Fig.2, the switch is moved from position1 to 2 at t=0, steady state having previously been attained. Find the voltage $V_c(t)$.	**07**
Q.4	**(a)**	Explain: (1) Conservation of charge (2) Conservation of Energy	**07**
	(b)	Discuss initial conditions in basic elements of network.	**07**
Q.5	**(a)**	Enlist conditions for reciprocal and symmetrical network in all types of parameters.	**07**
	(b)	For Fig.3 Find $G_{12}(s)$.	**07**
Q.6	**(a)**	Derive Y-parameters in terms of Z-parameters	**07**
	(b)	Calculate the Y-parameter of the fig.4	**07**
Q.7	**(a)**	Explain Source Transformation with Example.	**07**
	(b)	Explain Dot Convention with Example	**07**

****

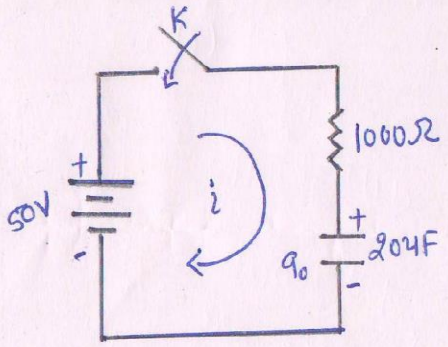

Fig. 1

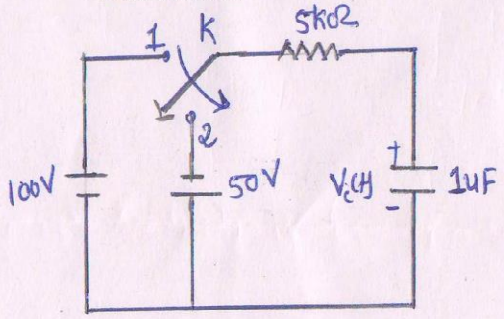

Fig. 2

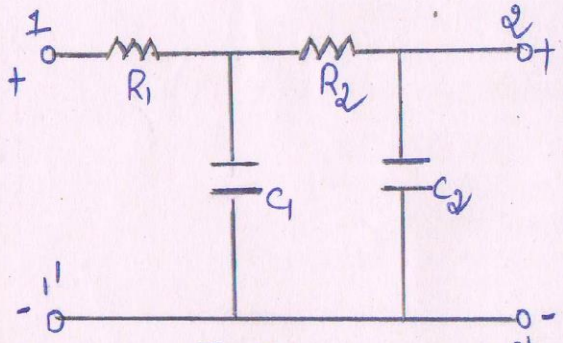

Fig. 3

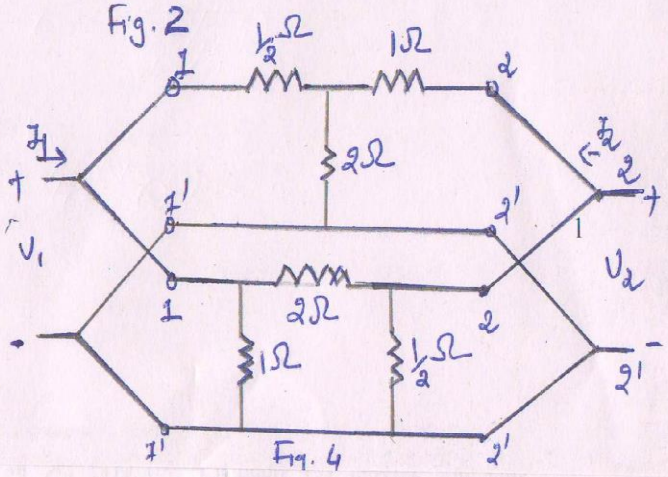

Fig. 4