Seat No.: _____ Enrolment No._____

GUJARAT TECHNOLOGICAL UNIVERSITY

PDDC– SEMESTER III– • EXAMINATION –WINTER- 2016

Subject Code: X30903 **Date:04/01/2017**

Subject Name: Control Theory

Time:10:30 AM to 1:00 PM **Total Marks: 70**

Instructions:

1. **Attempt all questions.**
2. **Make suitable assumptions wherever necessary.**
3. **Figures to the right indicate full marks.**

Q.1	**(a)**	Give the classification of control system. Explain close loop control system with example.	**07**
	(b)	Define Self Loop and Forward Path. Also Determine the Transfer Function for the system by using Manson's Gain Formula. (See Fig. 1)	**07**
Q.2	**(a)**	Explain force-voltage and force-current analogy with suitable example	**07**
	(b)	What is Transfer function? Determine the overall transfer function using block diagram reduction technique. (See Fig. 2)	**07**
		OR	
	(b)	Determine the Transfer Function for the Electrical system. (See fig. 3)	**07**
Q.3	**(a)**	Derive the expression for the rise time, and peak overshoot for 2nd order under damped control system.	**07**
	(b)	By means of Routh criteria determine stability of system described by characteristic equation: $S^5 + 4S^4 + 8S^3 + 8S^2 + 7S + 4 = 0$.	**07**
		OR	
Q.3	**(a)**	A unity feedback system is characterized by the open loop transfer function $G(s) = 4/(s(s+1))$. Determine rise time, peak time, peak overshoot and settling time.	**07**
	(b)	Draw the response of system having following location of roots. 1. Roots on negative real axis 2. Roots on positive real axis 3. Complex conjugate roots on left-half of the s-plane 4. Complex conjugate roots on right-half of the s-plane 5. Single pair of roots on imaginary axis 6. Double pair of roots on imaginary axis 7. Single root at origin	**07**
Q.4	**(a)**	Explain thermal system in brief with example.	**07**
	(b)	Draw the root locus diagram and find out the damping behavior with Open loop transfer function is given as below $G(s)H(s) = K/(s(s+2)(s+4))$	**07**
		OR	
Q.4	**(a)**	Explain the general Rules for Constructing Root Loci.	**07**
	(b)	Compare the time domain and frequency domain system.	**07**
Q.5	**(a)**	Sketch a polar plot for following transfer function $G(s) = 1/((1+s)(1+2s))$	**07**

(b) Explain the general procedure for constructing the Bode Plot. **07**

OR

Q.5 **(a)** Explain the Nyquist Stability Criterion with suitable example. **07**

(b) Define Following term: **07**

(i) State.
(ii) State Variables.
(iii)State Vector.
(iv) State Space.

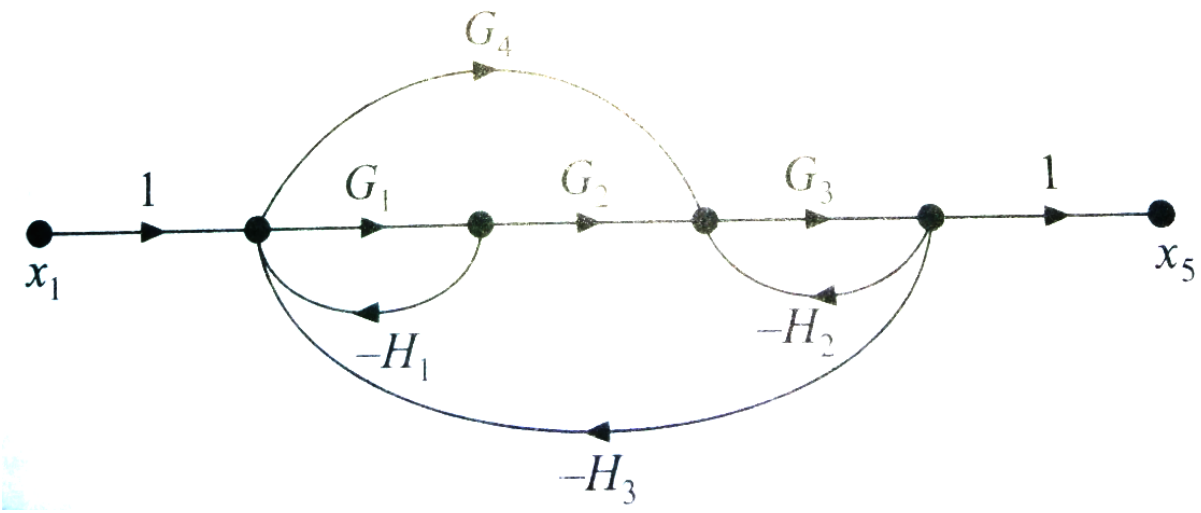

Figure 1

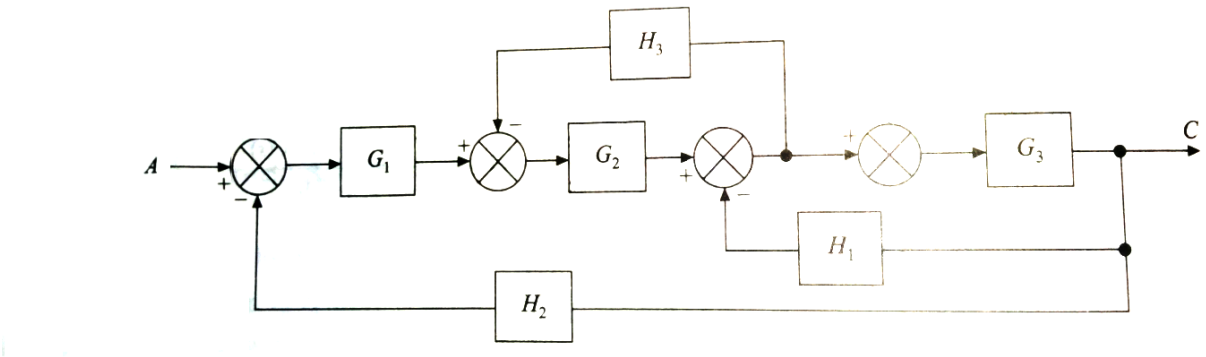

Figure 2

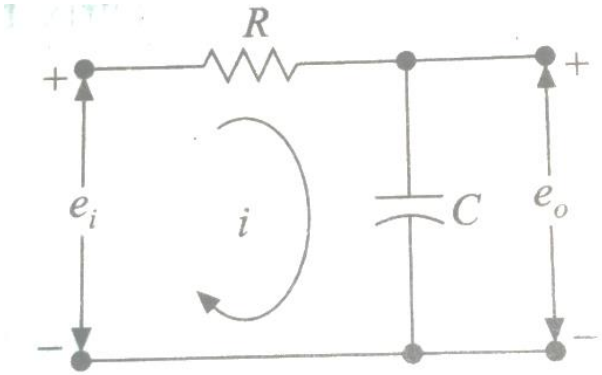

Figure 3

****