Seat No.: _____ Enrolment No._____

GUJARAT TECHNOLOGICAL UNIVERSITY

PDDC– SEMESTER IV– • EXAMINATION – SUMMER - 2016

Subject Code: X41102 **Date:19/11/2016**

Subject Name: Control Theory

Time:02:30 PM to 5:00 PM **Total Marks: 70**

Instructions:

1. **Attempt all questions.**
2. **Make suitable assumptions wherever necessary.**
3. **Figures to the right indicate full marks.**

Q.1	**(a)**	Define control system. Explain with suitable example both open loop & close loop control system.	**07**
	(b)	Justify the followings:	
		1) "In open loop control system, output variation is more sensitive to variations in G(s) as compared to closed loop system".	**03**
		2) "Close loop system with negative feedback is faster than open loop control system in time response."	**04**
Q.2	**(a)**	Define the term Transfer Function. Also determine the transfer function C/R for the system represented by the block diagram reduction techniques(See Fig. 1).	**07**
	(b)	Draw the Force to Current analogous circuit for the given system with necessary equilibrium equations (See Fig. 2).	**07**
		OR	
	(b)	Define Forward Path, Loop Transmittance & Self Loop. Also Determine the Transfer Function for the system by using Manson's Gain Formula. (See Fig. 1)	**07**
Q.3	**(a)**	Write a brief note on thermal system.	**07**
	(b)	Define static error coefficients. For series RLC circuit (See Fig. 3), Determine the undamped natural frequency and damping ratio. Assume zero initial conditions.	**07**
		OR	
Q.3	**(a)**	Derive the expression for the rise time, maximum overshoot & peak time for 2nd order control system subjected to unit step.	**07**
	(b)	The open loop transfer function of a unity feedback system is G(s) = 4/[s(s+1)]. Determine the nature of response of the closed loop system for a unit step input. Also determine the rise time, peak time, overshoot and settling time.	**07**
Q.4	**(a)**	List the limitations of Routh's criterion. Comment whether the system is stable or not using R-H Criterion? (See Fig. 4).	**07**
	(b)	The open loop transfer function of a control system is given by G(s)H(s)= K/[s(s+6)(s^2 + 4s + 13)]. Sketch the root locus and comment on stability.	**07**
		OR	
Q.4	**(a)**	Define the term stability. Explain the concept of stability contributed by various types of roots with time response.	**07**
	(b)	Explain in brief Nyquist stability criterion.	**07**
Q.5	**(a)**	Draw the Bode Plot for the system G(s) H(s) =4/[s(1 + 0.5s)(1+0.08s)]. Determine the Gain Margin, Phase Margin & comment on stability.	**07**
	(b)	Write a brief note on controllability.	**07**

OR

Q.5	**(a)**	Explain the correlation between transient response & frequency response.	**07**
	(b)	Define state & state variable. Explain the fact that for any system the set of state variables are non unique.	**07**

****

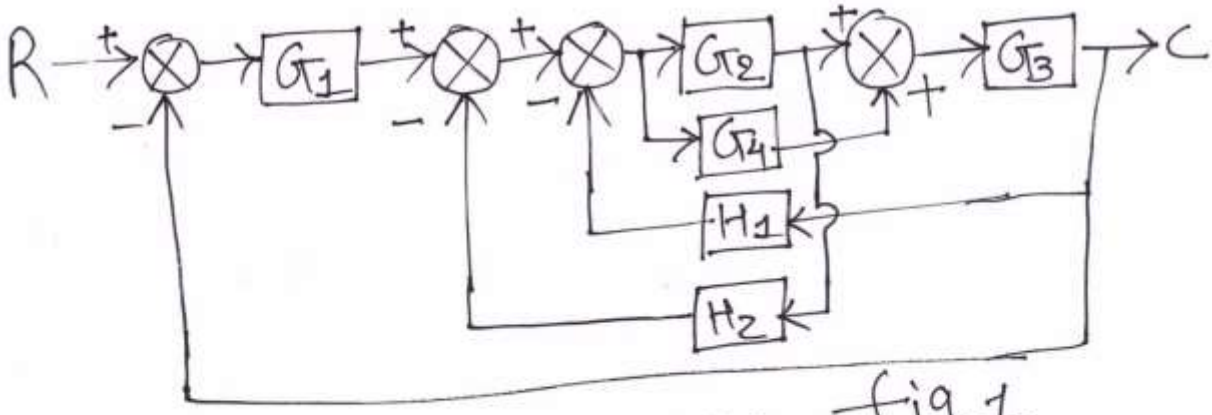

fig. 1

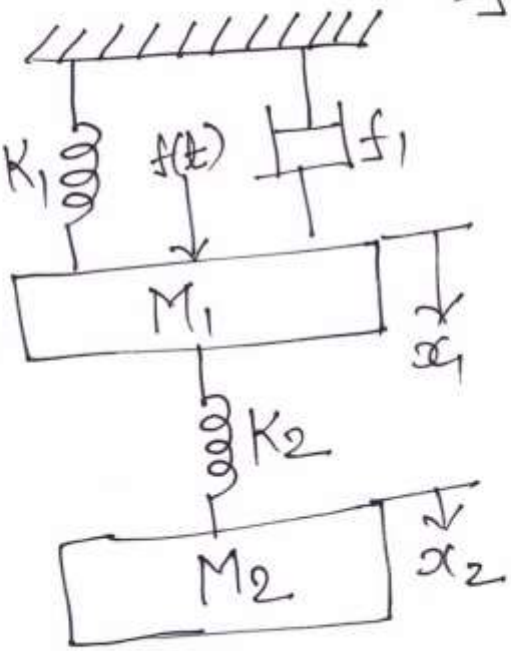

fig. 2

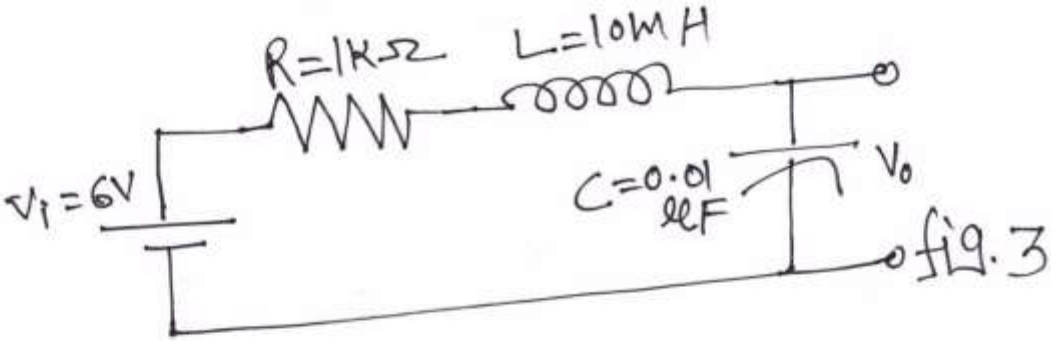

fig. 3

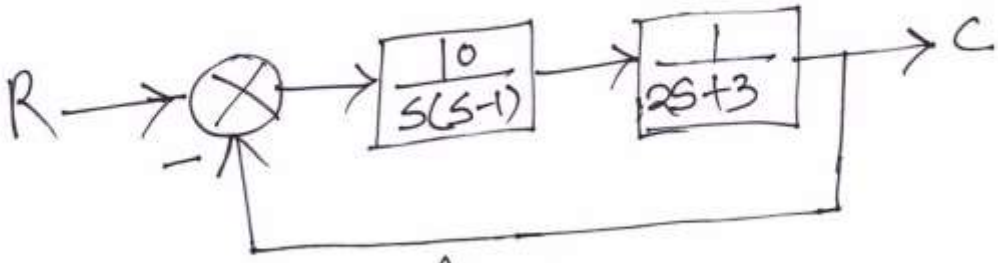

fig. 4