Seat No.: _____ Enrolment No._____

GUJARAT TECHNOLOGICAL UNIVERSITY

PDDC- SEMESTER–VI • EXAMINATION – WINTER - 2016

Subject Code: X61901 **Date:25.10.2016**

Subject Name: Computer Aided Design

Time:10.30 AM TO 01.00 PM **Total Marks: 70**

Instructions:

1. **Attempt all questions.**
2. **Make suitable assumptions wherever necessary.**
3. **Figures to the right indicate full marks.**

Q.1 **(a)** Explain the benefit of Computer Aided Design. **07**

(b) Explain DDA algorithm to scan a line. A line is required to draw from (15, 30) pixel to (62, 44) pixel. Calculate first six positions for the same using DDA algorithm. **07**

Q.2 **(a)** Explain PHIGS and IGES graphics standards. **07**

(b) For points $P_0 = (11, 25)$ and $P_1 = (100, 80)$ with corresponding slopes 60° and 30°, formulate the equation of a Hermite cubic spline and plot the curve by finding intermediate points at u=0.2, 0.4, 0.6 and 0.8. **07**

OR

(b) For points $P_0 = (11, 25)$, $P_1 = (31, 50)$, $P_2 = (70, 70)$ and $P_3=(100, 80)$, formulate the equation of a Bezier curve and plot the curve by finding intermediate points at u=0.2, 0.4, 0.6 and 0.8. **07**

Q.3 **(a)** A rectangle ABCD has vertices A(10,70), B(200,70), C(200,200) and D(10,200). This rectangle is to be reflected about a line P(25,20) and Q(110,150). Determine the vertices of transformed rectangle. **07**

(b) Given a point P(80, 40, 20) and using the homogeneous representation, obtain the coordinates after following transformations: **07**

a) Rotate the point P about X axis by 45° CCW followed by rotation about Z axis by 60° CCW.

a) Rotate the point P about Z axis by 60° CCW followed by rotation about X axis by 45° CCW

OR

Q.3 **(a)** With help of suitable example, explain translation, rotation and scaling in three dimensions using homogeneous coordinate system. **07**

(b) Explain wireframe model, CSG model and B-rep model. **07**

Q.4 **(a)** Explain concept of minimum potential energy approach in FEA. **07**

(b) For the spring assemblage shown below determine nodal displacements using Minimum potential energy approach. Take $k_1 = k_2 = 110$ N/mm, $k_3 = 80$ N/mm, $k_4 = 100$ N/mm and $P_3 = 200$ N. **07**

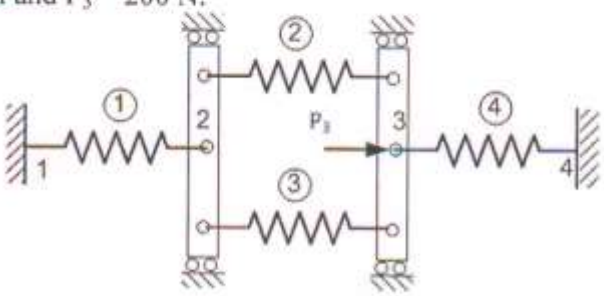

OR

Q.4 **(a)** Derive the equation to implement boundary condition in Finite Element Analysis using elimination method. **07**

(b) Consider the bar in figure below. Determine the nodal displacements. Use elimination method for handling boundary conditions. **07**

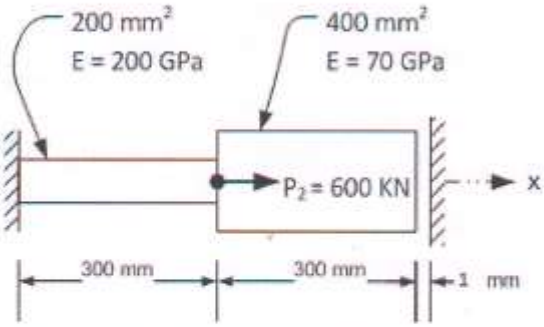

Q.5 **(a)** Explain the engineering applications of optimization. **07**

(b) Two products P and Q are sold by a company. The selling price of product P is Rs. 12 per kg more than its cost price, while for Q it is Rs. 9 per kg more than cost price. The raw materials available for products are Rs. 90 per kg for R and Rs. 70 per kg for S. To make 1 kg of P, 500 gms of R and 700 gms of S are needed. To prepare 1 kg of Q, 600 gms of R and 500 gms of S are needed. The market requirement for the products is 75 kg of P and 115 kg of Q. The availability of raw materials is 100 kg of R and 80 kg of S. How much of each should be produced to maximize profit? Formulate the optimization problem **07**

OR

Q.5 **(a)** With help of suitable example, explain components of an optimization problem. **07**

(b) An open rectangular box with square base is to be made from 48 ft.2 of material. What dimensions will result in a box with the largest possible volume? **07**

****