Seat No.: _____ Enrolment No._____

GUJARAT TECHNOLOGICAL UNIVERSITY

PDDC– SEMESTER VII– • EXAMINATION – SUMMER - 2016

Subject Code: X71902 **Date:25/11/ 2016**

Subject Name: Production Technology

Time:10:30 AM to 1:00 PM **Total Marks: 70**

Instructions:

1. **Attempt all questions.**
2. **Make suitable assumptions wherever necessary.**
3. **Figures to the right indicate full marks.**

Q.1 **(a)** In an orthogonal cutting with a single point tool of rake angle 10°, the following observations were made: **05**

Cutting force = 1200 N Thrust force = 500 N Chip thickness ratio = 0.3

From Merchant's theory, calculate the various components of the cutting forces and the coefficient of friction at the chip–tool interface.

(b) Mild steel work pieces 150 mm long x 100 mm diameter are to be turned on the lathe using a feed of 0.15 mm/rev. and depth of cut of 2.5 mm, using brazed carbide tool. Calculate optimum cutting speed and tool life for minimum cost of production. Also find production cost per piece. The following data is available: **05**

- Purchase cost of tool = Rs 300/-
- No. of regrinds = 10
- Labour and machine hour rate = Rs.600 per hour.
- Tool grinding cost = Rs. 25 per grind
- Tool changing time = 5 min.
- Tool life equation is $V\,T^{0.25} = 500$

(c) The tool-life equation for high-speed steel is given by $VT^{0.13} f^{0.6} d^{0.3} = C$. A tool life of 60 min was obtained at V=40 m/min, f =0.2 mm/rev and d =2.0 mm. Calculate the effect on tool life if the speed, feed, and depth of cut are together increased by 30%. **04**

Q.2 **(a)** Explain, using a neat sketch, the principle of material removal in EDM. Draw a typical RC used for EDM power supply. State the main functions of a dielectric used for EDM. **07**

(b) In an orthogonal turning operation of steel using a tool having a rake angle 10°, with a depth of cut 2 mm and feed rate 0.2 mm/rev, the cutting speed is 200 m/min, the chip thickness ratio is 0.3, the tangential cutting force is 1000 N, and the horizontal thrust force is 600 N. **07**

Calculate the power consumed in cutting, shearing, and chip friction at the tool face. Also determine the shear stress that acts along the shear plane.

OR

(b) i. Explain with neat sketch the Crater wear and Flank wear in cutting tools. **07**

ii. Explain the advantages of coated carbides over uncoated carbides. Name any three materials used for coatings.

Q.3 **(a)** Explain the gear manufacturing method: Gear Milling **05**

(b) Explain various ways of rolling external screw threads. **05**

(c) Explain the methods of reducing the force requirement in press work. **04**

OR

Q.3 **(a)** Explain the gear manufacturing method: Gear Shaping **05**

(b) Explain various methods of milling external screw threads. **05**

	(c)	Differentiate between cast structure and fabricated structure of the machine tool.	**04**
Q.4	**(a)**	Explain the tooling layout for the production of a Hexagonal bolt on a capstan lathe.	**05**
	(b)	Explain 3-2-1 principle of location in jig and fixture design.	**05**
	(c)	Explain with suitable sketch: an indexing jig.	**04**

OR

Q.4	**(a)**	Differentiate between parallel action and progressive action multi-spindle automats.	**05**
	(b)	State the advantages of using jigs and fixtures.	**05**
	(c)	Write a short note on: Types of drill bushes in jigs.	**04**
Q.5	**(a)**	A component shown in the figure is to be blanked from 2.0 mm thick cold rolled steel strip. Determine: i. the punch and die sizes for this operation if the allowance/clearance for the cold rolled steel is α= 0.075. ii. the blanking force required if the steel has a shear strength of 325 MPa and the tensile strength is 450 MPa.	**05**

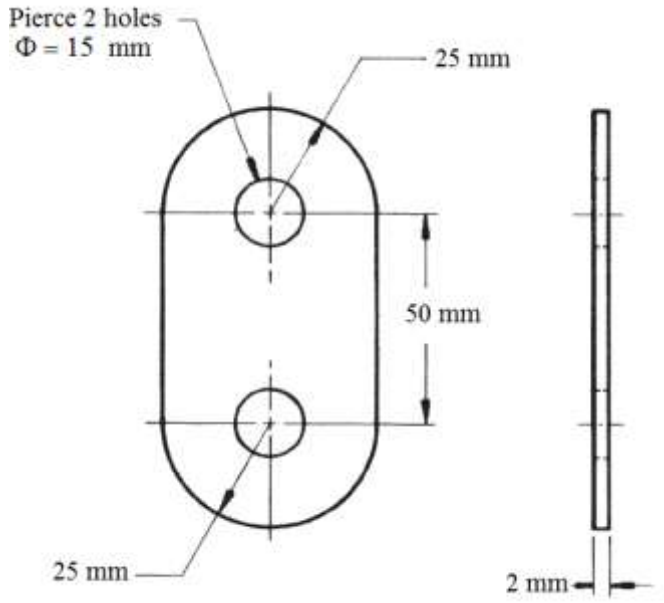

	(b)	What are the principal features of ECM? Show schematically the main elements of an ECM machine. State the important parameters that influence the MRR in ECM.	**05**
	(c)	State the main limitations of traditional machining methods. What are the advantages offered by nontraditional machining processes?	**04**

OR

Q.5	**(a)**	Explain significance of center of pressure in design of press tools. With the help of a suitable example, explain the procedure for calculating center of pressure.	**05**
	(b)	Explain how the material is removed in USM. Show schematically the main elements of a USM machine.	**05**
	(c)	Explain the need for unconventional machining processes compared to conventional ones.	**04**

****