Seat No.: _____ Enrolment No._____

GUJARAT TECHNOLOGICAL UNIVERSITY

PDDC - SEMESTER – V • EXAMINATION – WINTER 2012

Subject code: X 51903 **Date: 23/01/2013**

Subject Name: Machine Design - I

Time: 02.30 pm - 05.00 pm **Total Marks: 70**

Instructions:

1. **Attempt all questions.**
2. **Make suitable assumptions wherever necessary.**
3. **Figures to the right indicate full marks.**

Q.1 (a) (i) What is endurance limit stress? Explain Soderberg diagram. **04**

(ii) Explain considerations for forging process in design. **03**

(b) (i) Write benefits of using standardization in engineering design. **04**

(ii)Write first three terms of the Reynard series R10/3(1.6,…..) **03**

Q.2 (a) Write benefits of using the V-belt over the flat belt. Also discuss the limitations of the V- belt drive. **07**

(b) A flat belt pulley transmits 20 kW power at 750 rpm. Angle of lap is 165° and co-efficient of friction 0.30. Pulley diameter is 320 mm. Mass of belt per unit length is 1.0 kg/m. Allowable tension in belt is 20 N/mm width of belt. Permissible bending stress in the arms is 16 N/mm^2 and 4 no. of arms. The cross section of the arms is elliptical having major axis twice the minor axis. Find the cross sectional dimensions of the rim and the arms of the pulley. **07**

OR

(b) Write the design procedure for a chain drive. **07**

Q.3 (a) (i) State the applications of the concentric helical compression springs. **04**

(ii) Explain the terms related to helical spring. **03**

1. Spring stiffness 2. Spring Index 3. Wahl's Stress factor

(b) Design a helical Compression spring for maximum load of 800 N for a maximum deflection of 20 mm using the value of spring index as 6. Maximum permissible shear stress in the wire is 450 N/mm^2 and modulus of rigidity of shaft material is 80000N/mm^2. **07**

OR

Q.3 (a) Derive an expression for Lami's equation for finding the wall thickness of a single thick cylinder subjected to internal pressure only. **07**

(b) A hollow cylinder of 100 mm external diameter and 60 mm internal diameter is subjected to an internal pressure of 20 MPa and external pressure of 6 MPa. Find the minimum and maximum intensities of the tangential and the radial stresses. Show the variation of the stresses over the wall thickness of the cylinder. **07**

Q.4 (a) Classify the clutches. **07**

For same torque capacity find the ratio of axial force required for single plate clutch and cone clutch having semi-cone angle 12°.

(b) A cone clutch has mean diameter 200 mm, it transmits 25 kW power at 1440 rpm with a service factor of 1.2. The semi-cone angle is 12°, permissible bearing pressure is 0.2 MPa and co-efficient of friction 0.3. Find the required face width, inner and outer diameter of the friction lining and axial force required to hold the clutch in engagement. **07**

OR

Q.4 **(a)** (i) Enlist the desirable properties for a brake lining material. **04**

(ii)Explain the condition for self locking in differential band brake. **03**

(b) Fig. shows a double block brake. The diameter of brake drum is 360 mm and contact angle for each shoe is 90^0. If the co-efficient of friction for the brake lining and the drum is 0.35, find the spring force necessary to transmit 90 Nm torque. Also determine the width of the brake shoe if permissible bearing pressure is 0.10 N/mm^2. **07**

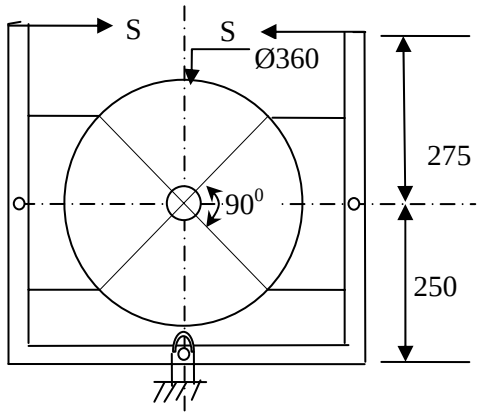

Q.5 **(a)** Explain the performance of a hydrodynamic bearing with the bearing characteristic number (curve of co-eff. of friction f versus μ.N/p). State the importance of the bearing modulus and value of characteristic number in bearing design. **07**

(b) The following data is given for a 360° hydrodynamic bearing. **07**

l/d ratio = 1.0, Journal speed = 1440 rpm, Journal diameter = 100 mm,
Journal diametral clearance = 100 microns, External load = 10 kN.
Value of minimum film thickness variable = 0.3.
Find the viscosity of the oil to be used, power lost in friction and flow requirement in lit/min.

l/d	h_o/c	$S=(r/c)^2.(\mu n_s/p)$	(r/c)f	$Q/(rcn_sl)$
1.0	0.4	0.121	3.22	4.33
1.0	0.2	0.0446	1.70	4.62

OR

Q.5 **(a)** Explain following with respect to antifriction bearing. **07**

Static load carrying capacity, Dynamic load carrying capacity, Rating life of bearing.

(b) A single row deep groove ball bearing is subjected to pure radial load of 3.2 kN from a shaft rotating at 900 rpm. The expected life of L10h of the bearing is 30000 hours. The minimum acceptance diameter of the shaft is 40 mm. Select a suitable ball bearing for the application. **07**

Bearing No.	6008	6208	6308	6408
Basic load rating (N)	16800	30700	41000	63700

****