Seat No.: _____ Enrolment No._____

GUJARAT TECHNOLOGICAL UNIVERSITY

PDDC - SEMESTER – VII • EXAMINATION – WINTER 2012

Subject code: X 71904 **Date: 01/01/2013**

Subject Name: Control Engineering

Time: 10.30 am - 01.00 pm **Total Marks: 70**

Instructions:

1. **Attempt all questions.**
2. **Make suitable assumptions wherever necessary.**
3. **Figures to the right indicate full marks.**

Q.1 **(a)** Compare open loop and close loop control systems. write down major advantage and disadvantages of control system closed loop **07**

(b) What is transfer function derive the equation for transfer function for closed loop system **07**

Q.2 **(a)** What is signal flow graphs? Define node, branch, source, sink , path , loop and loop gain.Explain Masons gain formula with their steps. **07**

(b) Solve figure and find transfer function with masons gain formula. **07**

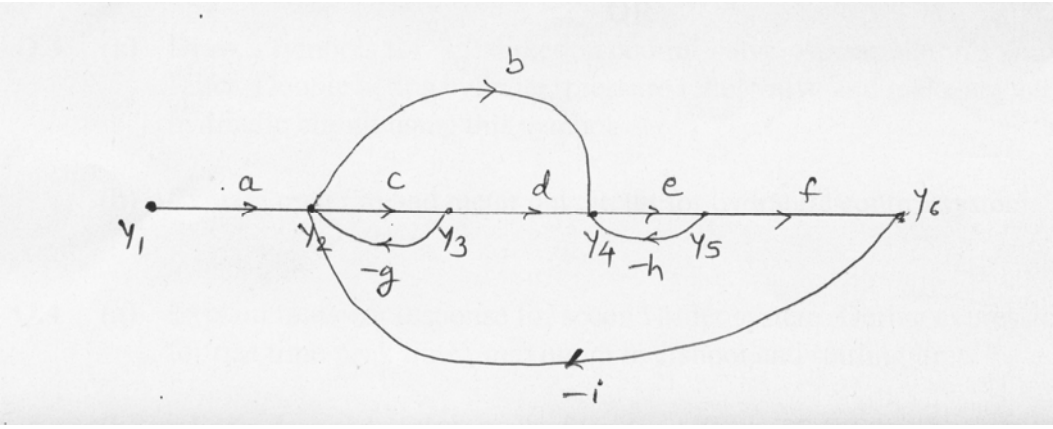

OR

(b) Solve figure and find a transfer function. Where k1, k2 stiffness f1,f2 damping coefficients, f is a force. **07**

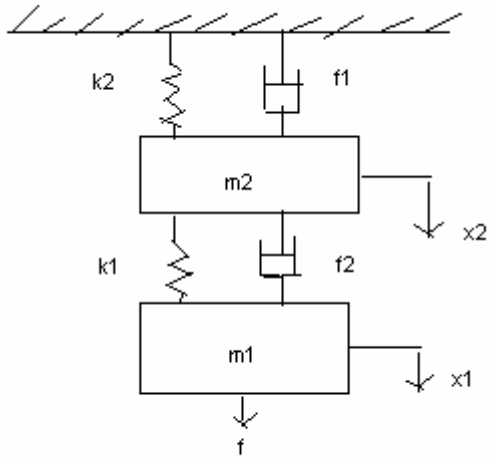

Q.3	**(a)**	Write down advantages and disadvantages of hydraulic control system. Also explain basic components of hydraulic control system.	**07**
	(b)	Write the comparision of pnematic control system and hydraulic control system. Sketch a schematic diagram of a pneumatic nozzle flapper amplifier system and explain its working.	**07**

OR

Q.3	**(a)**	Draw a symbols for 3/2 direction control valve, Accumulator, Pump, Filter, Double acting cylinder, pressure relief valve and make any one hydraulic circuit using this symbol.	**07**
	(b)	Explain meter in and meter out circuit for hydraulic control system.	**07**
Q.4	**(a)**	Explain transient response for second order system. Derive expression for rise time peak time , maximum overshoot and settling time	**07**
	(b)	For a forward path transfer function G(S) = 25/S(S+6) having unity feed back system Find the expression for unit step response , rise time, peak overshoot	**07**

OR

Q.4	**(a)**	Write a short note on programmable logic controller with any one ladder diagram.	**07**
	(b)	Describe a control system for boiler feed water system.	**07**
Q.5	**(a)**	What is state space representation in control system. Explain it with at least one example.	**07**
	(b)	Describe control system for thermal power plant	**07**

OR

Q.5	**(a)**	Define degree of membership , fuzzification and difuzifiction , and rule base system. Also define crisp relations and fuzzy relations.	**07**
	(b)	Explain a control system for liquid level system giving at least one example.	**07**

****