Seat No.: _____ Enrolment No._____

GUJARAT TECHNOLOGICAL UNIVERSITY

PDDC - SEMESTER–VII • EXAMINATION – WINTER 2013

Subject Code: X 71104 **Date: 10-12-2013**

Subject Name: Control Engineering

Time: 10.30 am - 01.00 pm **Total Marks: 70**

Instructions:

1. **Attempt all questions.**
2. **Make suitable assumptions wherever necessary.**
3. **Figures to the right indicate full marks.**

Q.1	**(a)**	What do you mean by control system? Distinguish between open loop control system and closed loop control system. Also write down the advantages and disadvantages of close open loop control system.	**07**
	(b)	Obtain a system equation for the mechanical system shown in Figure 1. Also derive the transfer function of the system.	**07**
Q.2	**(a)**	Reduce the block diagram shown in Figure 2 and obtain the overall transfer function.	**07**
	(b)	What is a signal flow graph? What are the properties of signal flow graph? State and explain Mason's gain formula for signal flow graph.	**07**
		OR	
	(b)	Draw the signal flow graph from the block diagram shown in Figure 3. Using Masson's gain formula, obtain the transfer function.	**07**
Q.3	**(a)**	Explain about the transient and steady state response of the system. Also list out the standard test signals and explain any two of them.	**07**
	(b)	Obtain the transient response of first order system subjected to unity step input. Also draw the response curve of the same explaining the terms involved.	**07**
		OR	
Q.3	**(a)**	Define following terms in context with the transient response specifications of second order system using neat sketch: Delay time, Rise time, Peak time, Settling time, Maximum overshoot and Steady state error	**07**
	(b)	The overall transfer function of a control system is given by $\frac{C(s)}{R(s)} = \frac{16}{s^2 + 1.6s + 16}$. Determine the rise time, peak time, maximum overshoot and steady state error.	**07**
Q.4	**(a)**	What do you mean by the stability of the system? With suitable example, explain any one of the stability criterion.	**07**
	(b)	Using Routh criterion, discuss about the stability for the system having whose characteristic equation is given as $s^5 + 2s^4 + 6s^3 + 12s^2 + 6s + 10 = 0$.	**07**
		OR	
Q.4	**(a)**	Discuss about an on-off control action type automatic industrial controller with differential gap.	**07**
	(b)	Describe with neat sketch an proportional control action type automatic industrial controller.	**07**
Q.5	**(a)**	What is a programmable logic controller? Write down industrial applications of a programmable logic controller.	**07**
	(b)	Distinguish between hydraulic and pneumatic control systems. State the various components of any hydraulic circuits. Name the various types of hydraulic pumps commonly used in industries.	**07**
		OR	
Q.5	**(a)**	Describe the working of a field controlled DC motor and derive its transfer function.	**07**
	(b)	Draw and explain detail block diagram of fuzzy logic controller.	**07**

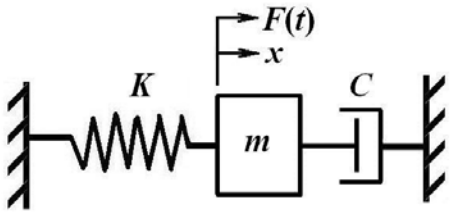

Figure 1, Q.1 (b)

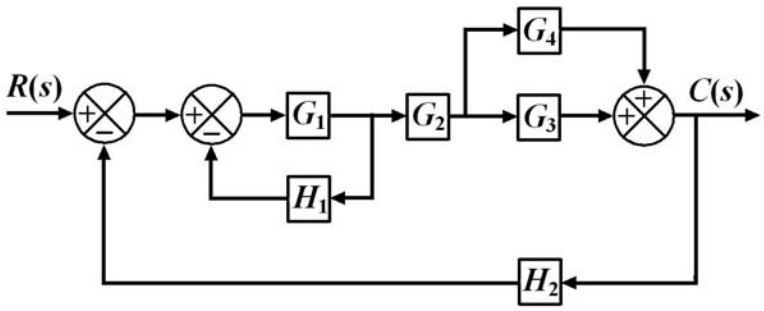

Figure 2, Q.2 (a)

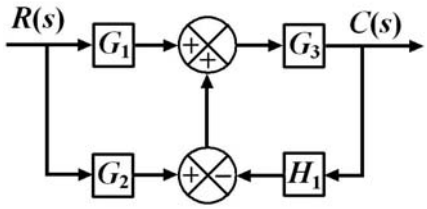

Figure 3, Q.2 (b) (OR)

****