Seat No.: _____ Enrolment No._____

GUJARAT TECHNOLOGICAL UNIVERSITY

PDDC - SEMESTER–III • EXAMINATION – WINTER • 2014

Subject Code: X30903 **Date: 31-12-2014**

Subject Name: Control Theory

Time: 10:30 am - 01:00 pm **Total Marks: 70**

Instructions:

1. **Attempt all questions.**
2. **Make suitable assumptions wherever necessary.**
3. **Figures to the right indicate full marks.**

Q.1 **(a)** Explain hurwitz criterion and routh's criterion with its limitation. **07**

(b) Give any two practical example of close loop control system with suitable diagram. **07**

Q.2 **(a)** Give the comparison between block diagram and signal flow graph. **07**

(b) Find C/R for the following system whose signal flow graph is shown in fig.1. **07**

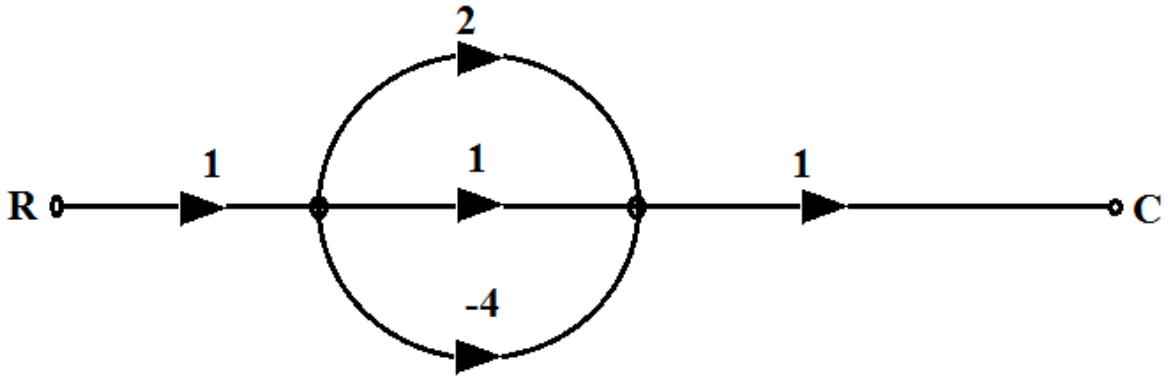

Fig.-1

OR

(b) Explain the following with respect to stability analysis. **07**

(1) Stable system
(2) Unstable system
(3) Absolute stable system
(4) Critical or marginally stable system
(5) Conditionally stable system

Q.3 **(a)** Find the single block equivalent by block diagram reduction technique for below figure.-2. **07**

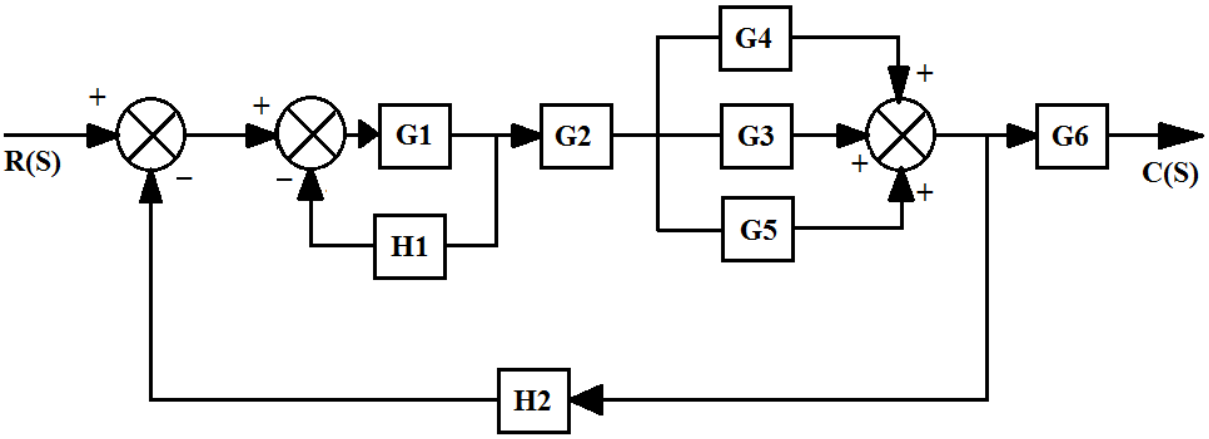

Fig.-2

(b) Give advantage and disadvantage of transfer function and also explain poles and zeros of transfer function. **07**

OR

Q.3 **(a)** Define the following terms **07**

(1) State
(2) State variable
(3) State vector
(4) State space

(b) Explain role of ζ in second order system. **07**

Q.4 **(a)** Explain the procedure for constructing root locus. **07**

(b) Give the steps for solving bode plot and also explain gain margin and phase margin **07**

OR

Q.4 **(a)** Discuss nyquist stability criterion. Comment on stability analysis. **07**

(b) Explain the polar plot for integral factor i.e (1/S) and derivative factor i.e (S) **07**

Q.5 **(a)** Explain the following terms for time response **07**

(1) Time response
(2) Steady state response
(3) Transient response

(b) Give the steps for obtaining transfer function from bode plot. **07**

OR

Q.5 **(a)** For the system shown in fig.-3. Write the system equations. **07**

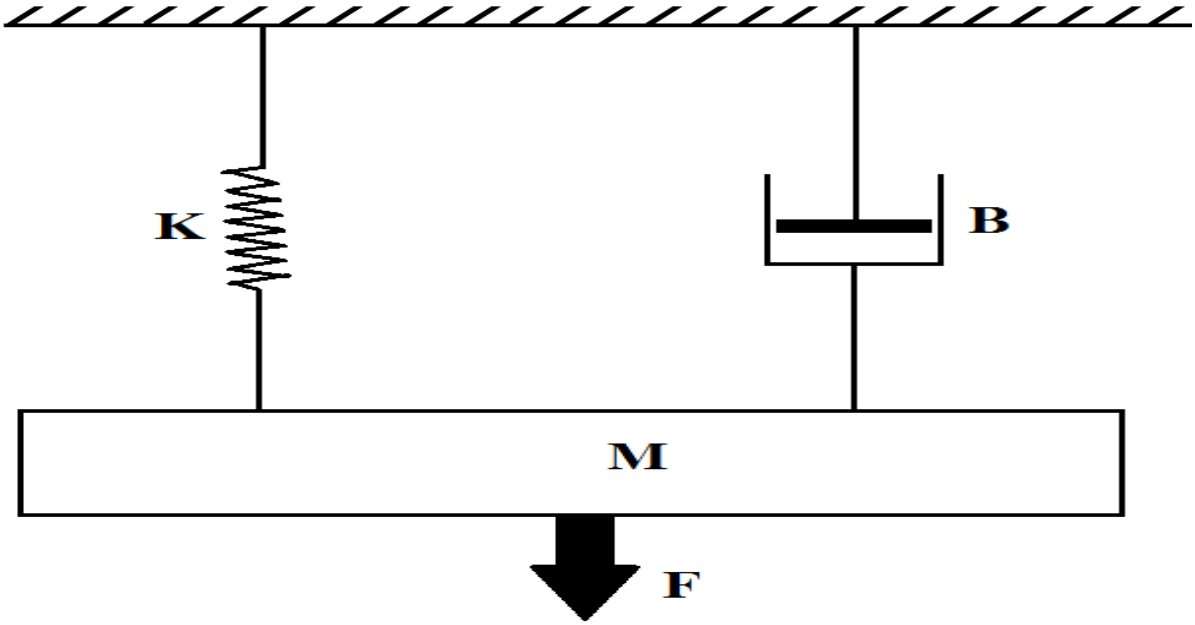

Fig.-3

(b) Find range of K for stability using routh's criterion for below figure.-4 **07**

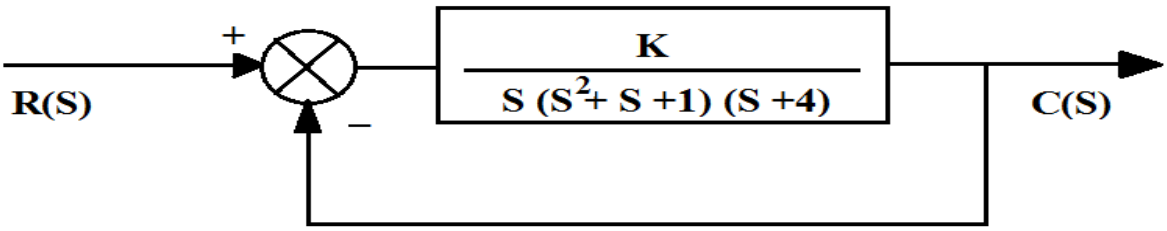

Fig.-4

****