B. H. GARDI COLLEGE OF ENGINEERING & TECHNOLOGY

GTU MID SEM TEST

Subject: Engineering Graphics **Date:**

Total Marks: 40 **Sem/Branch: 2nd EC/ME**

Student Id No._____ **Time: 08:15 to 09:45**

Instructions:

(1) Digits to the right indicate full marks.
(2) Draw neat & clean diagrams.
(3) Assume suitable data whenever necessary.
(4) Start new question from new page.

Q.-1 (a) Briefly Explain Representative Fraction (R.F.) (02)
(b) Explain System of Dimensioning. (04)
(c) Divide 122 mm line into number of equal parts say 10. (02)
(d) Draw the projection of points for following case. (04)

- Point A is 20 mm in front of V.P & 15 mm above H.P.
- Point B is 20 mm behind of V.P & 15 mm above H.P.
- Point C is 20 mm behind of V.P & 15 mm below H.P.
- Point D is 20 mm in front of V.P & 15 mm below H.P.

Q.-2 The foci of an ellipse are 110 mm apart. The minor axis is 70 mm long. Determine the length of the major axis and draw the ellipse by arc of circle method. (07)

OR

Q.-2 Draw the Archemedian spiral of 1.5 convolution, the greatest and the least radii being 125 mm and 35 mm respectively. (07)

Q.-3 A line AB 75 mm long is inclined at an angle of 45° to H.P. and 30° to V.P. one of its end point A is in H.P. as well as V.P. determine its apparent inclination with V.P. (07)

OR

Q.-3 A line AB 75 mm long has its end point A 15 mm above H.P. and 10 mm in front of V.P. and point B 45 mm above H.P. and 50 mm in front of V.P. determine its true inclination of line AB with H.P. and V.P. (07)

Q.-4 An isosceles triangular plane ABC having its base AB=50mm and altitude 60mm is resting on H.P. on its base AB with its surface making an angle of 45°to H.P. The base AB which is in H.P. makes an angle of 60° to V.P. draw the projection of plane. (07)

OR

Q.-4 Draw the projection of a regular hexagon of 25mm side, having one of its sides in the H.P. and inclined at 60° to the V.P. and its surface making an angle of 45° with the H.P. (07)

Q.-5 Fig. 01 shows pictorial view of an object. Draw following views: (i) Front view looking in the direction X. (ii) Top view. Use first angle projection method. (07)

OR

Q.-5 For Fig. 01 draw the following views. (i) Front view looking in the direction X. (ii) Full Sectional side view. (07)

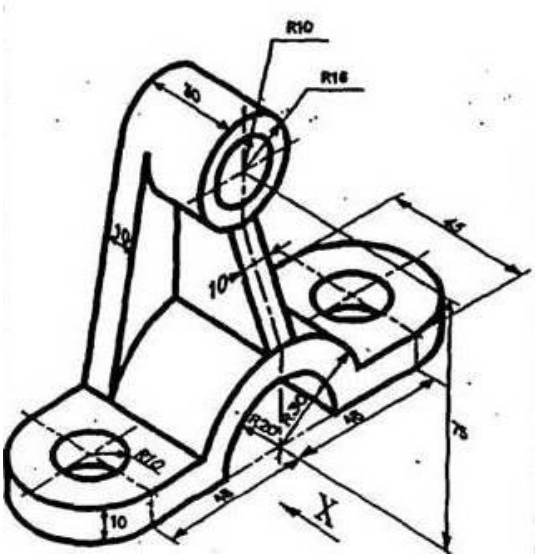

Figure: 01

Best of Luck