B H GARDI COLLEGE OF ENGINEERING & TECHNOLOGY

GTU MID SEM TEST

Subject: Elements of Electrical Engg. **Date: 26/03/2009**

Total Marks: 40 **Sem/Branch: 2nd EC/MECH**

Student Id No._____ **Time: 08:30 to 10:00**

Instructions:

(1) Digits to the right indicate full marks.
(2) Draw neat & clean diagrams.
(3) Assume suitable data whenever necessary.
(4) Start new question from new page.

Q.1 (A) Find the current drawn by the circuit in figure 1 when it is connected across 25V DC supply. **04**

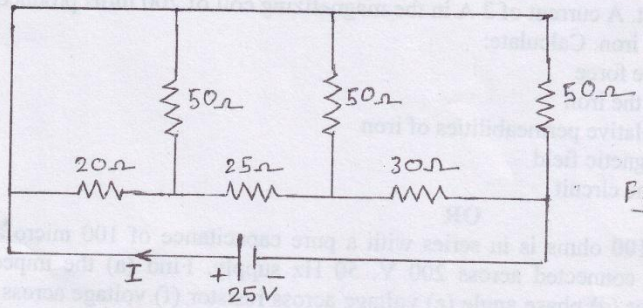

Figure - 1

Q.1 (B) With neat sketch briefly explain how an alternating voltage is produced when a coil is rotated in a magnetic field. **04**

Q.2 (A) Calculate the resistance of 100m length of a wire having uniform cross-sectional area of 0.1 mm^2 if the wire is made of manganin having a resistivity of 50×10^{-8} Ω-m. If the wire is drawn out to three times its original length, by how many times would you expect its resistance to be increased? **05**

Q.2 (B) What is the purpose of fuse in electric circuit? Why fuse is always connected in Phase wire? **03**

OR

Q.2 (A) Find the current in the 17Ω resistor in the network shown in figure 2 by using star/delta conversion. **05**

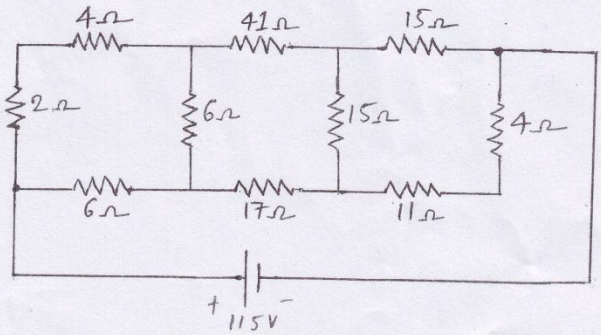

Figure - 2

Q.2 (B)	Briefly discuss the factors on which intensity of electric shock depends.	03
Q.3 (A)	Explain the method of transforming a delta network into a star network. Derive the formula for equivalent resistance in star connection.	05
Q.3 (B)	Name various safety devices and briefly discuss about them.	03

OR

Q.3 (A)	Discuss the sequence of domestic electrical wiring installations with necessary block diagram.	05
Q.3 (B)	What is earthing? What are the benefits of earthing?	03

Q.4 (A)	Explain the concept of leakage flux and fringing in brief.	04
Q.4 (B)	Discuss half-power bandwidth of a series AC circuits with neat sketch.	04

OR

Q.4 (A)	Derive the phasor relationship between V & I in purely capacitive circuit.	04
Q.4 (B)	Explain in brief with neat diagram how can you obtain hysteresis loop of ring specimens.	04

Q.5 A magnetic circuit consists of an iron ring of mean circumference of 80 cm with cross-sectional area 12 cm^2 throughout. A current of 2 A in the magnetizing coil of 200 turns produces a total flux of 1.2 mWb in the iron. Calculate:

(a) The magneto motive force
(b) The flux density in the iron
(c) The absolute and relative permeabilities of iron
(d) The strength of magnetic field
(e) The reluctance of the circuit **08**

OR

Q.5 A pure resistance of 100 ohms is in series with a pure capacitance of 100 microfarads. The series combination is connected across 200 V, 50 Hz supply. Find (a) the impedance, (b) current (c) power factor (d) phase angle (e) voltage across resistor (f) voltage across capacitor. Draw the vector diagram. **08**