Enrollment No._____ Student sign:-_____

GUJARAT TECHNOLOGICAL UNIVERSITY

Mahatma Gandhi Institute of Tech. Education & Research Center, Navsari

B. E. F. Y. (SEM – II) MID SEMESTER EXAMINATION - MARCH 2009

Subject:-Engineering Graphics (Code:-110013)

Date:28-03-09 Time: 105 Minutes Max. Marks: 40

Center Code:033

Instructions:
1. Attempt all questions.
2. Make suitable assumptions wherever necessary.
3. Figures to the right indicate full marks.
4. Don't rub construction/projection lines after completion of drawing.
5. All dimensions are in mm.

Q.1 (a) Construct a regular octagon of side 30mm. **[03]**

(b) A plane is parallel to H.P. Its T.V. is a circle of 50mm diameter. Draw the isometric projection of the plan. **[03]**

(c) Following figure shows two views. Draw (I) Sectional front view at A-A (II) Top view **[06]**

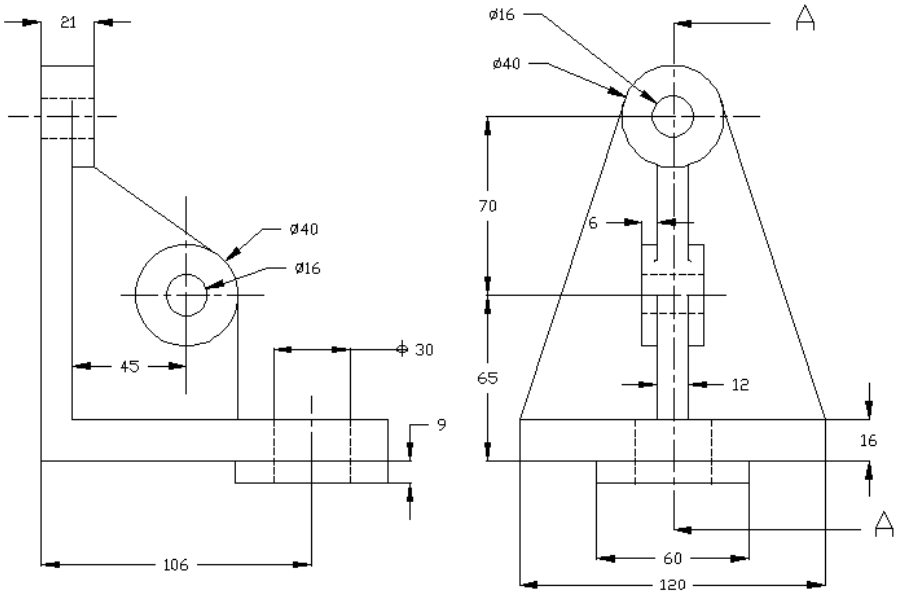

Q.2 (a) The F.V. of a line AB makes an angle of 30° with xy. The H.T. of the line is 45mm behind V.P., while its V.T. is 30mm above H.P. One end of the line is 10mm below H.P. and the other end is 100mm behind V.P. Draw the projections of the line and determine (I) T.L. of the line AB and (II) its inclinations with H.P. and V.P **[07]**

(b) Draw the projections of a circle of 70mm diameter resting on the H.P. on a point A of the circumference. Plane is inclined to the H.P. such that the plan of it is an ellipse of minor axis 40mm.Measure the angle of the plane with the H.P. **[07]**

[P.T.O]

OR

Q.2 (a) A line PQ 100mm long inclined long 30° to H.P. and at 45° to V.P. Its mid point is in the V.P. and 25mm above H.P. draw its projections. If its end P is in the IIIrd quadrant and Q is in the Ist quadrant. **[07]**

(b) A regular pentagon ABCDE, of 30mm sides, has its side AB in the V.P. The corner A is 15mm Above H.P. and the corner D is 20mm in front of V.P. Draw the projection of plane. Find its inclination with V.P. **[07]**

Q.3 (a) Following figure shows two views of an object. Draw its Isometric view **[07]**

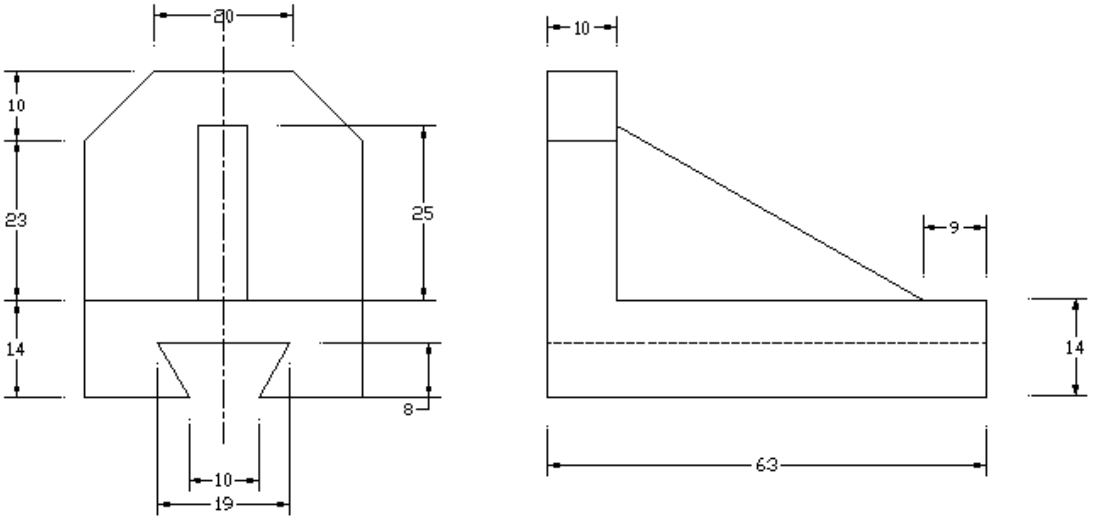

[07]

(b) Fig.1 shows pictorial view of an object. Draw according to 3rd angle projection method.
(I) Sectional side view at A-A (II) Front view

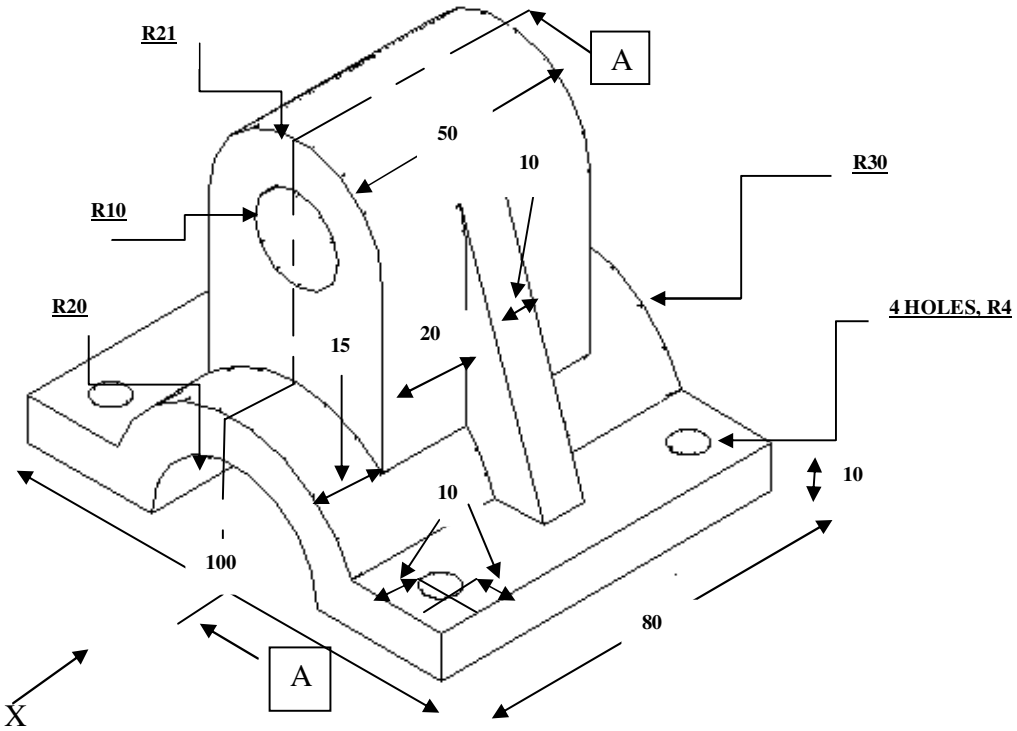

Fig.1

[P.T.O]

OR

Q.3 (a) Fig.1 shows pictorial view of an object. Draw according to 3rd angle projection method. **[07]**

(I) Front view (II) Top view
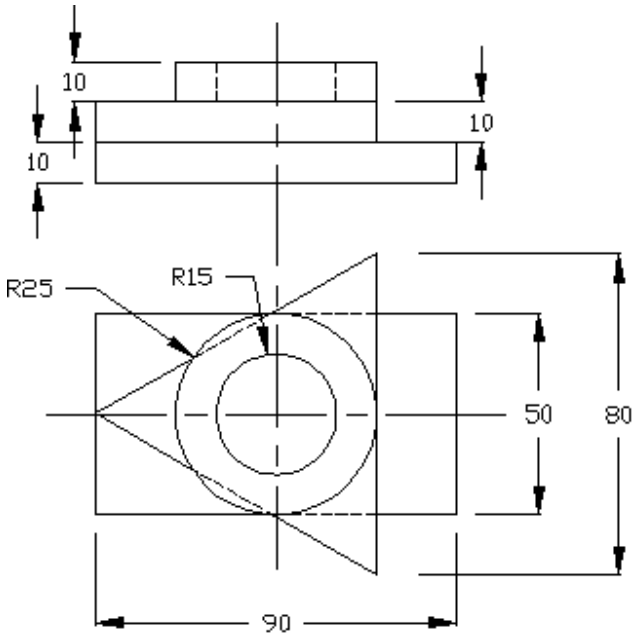
(b) Following figure shows two views of an object. Draw its Isometric view. **[07]**