Center Code:033

Enrolment No._____ Student sign:-_____

GUJARAT TECHNOLOGICAL UNIVERSITY

Mahatma Gandhi Institute of Tech. Education & Research Center, Navsari

B. E. F. Y. (SEM – II) MID SEMESTER EXAMINATION - MARCH 2009

Subject: Elements of Electrical Engineering. (Code:110005)

Date: 26/03/2009 Time: 90 Minutes Max. Marks: 40

Q.1 (A) Define following terms: **[3]**
1. Phase
2. Phase Difference
3. Instantaneous Value.

(B) Define following terms: **[3]**
1. Resistivity
2. Current
3. Potential difference.

(C) Define Resistance and Explain Resistances in series. **[3]**

(D) Explain the wiring diagram of a tube light with choke and glow starter. **[3]**

Q.2 (A) Explain Active power, Reactive power and apparent power. **[3]**

(B) Define (i) form factor (ii) peak factor. Obtain the R.M.S. value and average value of half wave rectified sinusoidal voltage wave. **[8]**

(C) Prove the average power consumed by a purely capacitive circuit is zero, when a sinusoidal voltage is applied to it. **[3]**

OR

Q.2 (A) What is the function of fuse in an electrical circuit? State the desirable properties of fuse element. **[3]**

(B) A certain waveform has a form factor of 1.2 and a peak factor of 1.5.If the maximum value is 100, find r.m.s value and average value. **[2]**

(C) An alternating voltage is given as v = 400 sin 377 t. Determine: (i) R.M.S. Value (ii) Average value (iii) frequency (iv) periodic time (v) value the of the voltage at 0.025 second (vi) time at which voltage attains 200V for the first time. **[6]**

(D) Prove analytically that the current in a purely inductive circuit lags behind its voltage by 90°. Prove that average power consumption in a pure inductor is zero when a.c. voltage is applied. **[3]**

Q.3 (A) Define Ohm's law and its limitations. **[4]**

(B) Derive the theory for delta-to-star conversion. **[4]**

(C) Derive an expression for the charging current of capacitor & plot the graph of charging current versus time. **[6]**

OR

Q.3 (A) State the different methods of earthing and explain any one of them. **[5]**

(B) Derive the equation of capacitance of parallel plate capacitor with uniform dielectric material. **[3]**

(C) Find Rxy of the circuit as shown in fig. **[6]**

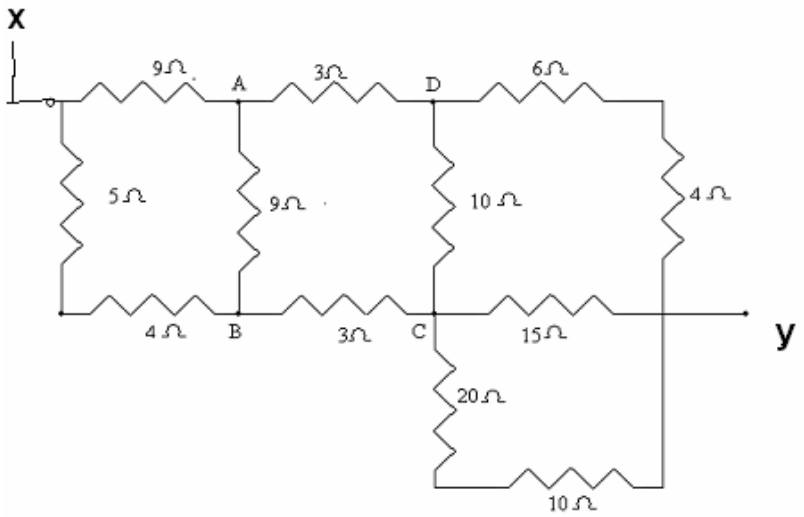

----------BEST OF LUCK----------