Roll No.	**Enrolment No.**

C.U SHAH COLLEGE OF ENGINEERING &TECHNOLOGY,WADHWAN

B.E all Semester – II Mid Semester Examination March-2009

Subject : Mechanics of Solids

Date: 25/03/2009 Time: 3:00 to 4:30 p.m. Max. Marks :40

Instructions : 1> Attempt all questions.
2> Make Suitable assumption wherever necessary.
3> Figure to the right indicates full marks.

Que.1 (A) State and prove law of parallelogram. (05)

(B) Attempt any two. (10)

1. Determine the maximum and minimum resultant of two forces having magnitudes 12 N and 8 N respectively.
2. Find out forces in the string as shown in the figure.

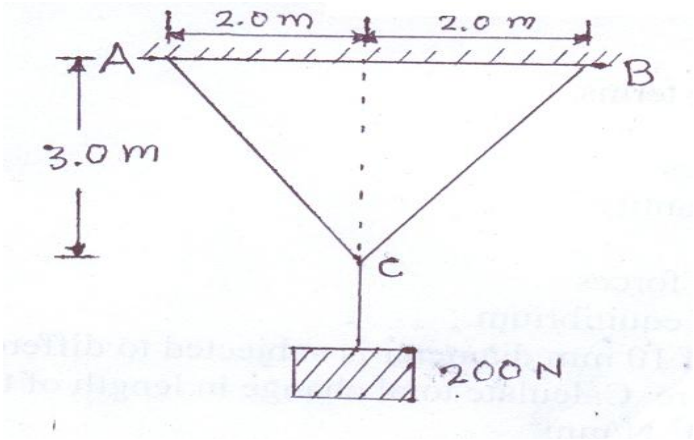

3. Find the moment of 300 N force about point A as shown in figure.

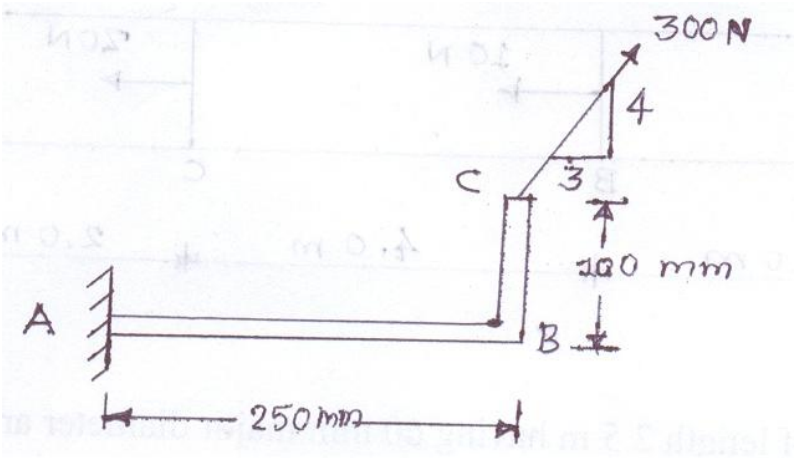

Que.2 (A) Derive relation between young's modulus (E) ,Bulk modulus (K) and Poisson's ratio (1/m). (05)

(B) Attempt any two. (10)

1. A steel rod of 10mm diameter and 4 m length is connected to two Grips at each end at a temp. of 150° C . Find the pull exerted when the temperature fall of 40° C.
   If the ends (I) Do not yield.
   (II) yields by 1.0 mm.
   Take co-efficient of thermal expansion as 12×10^{-6} per ° C and $E = 200 \times 10^{3}$ N/mm^2.
2. A steel bar 2 m long and 20 mm diameter is acted upon by 70 KN compressive force. If $E = 200 \times 10^{3}$ N/mm^2 and Poisson's ratio is 0.25. Find change in length and diameter, linear strain and lateral strain.

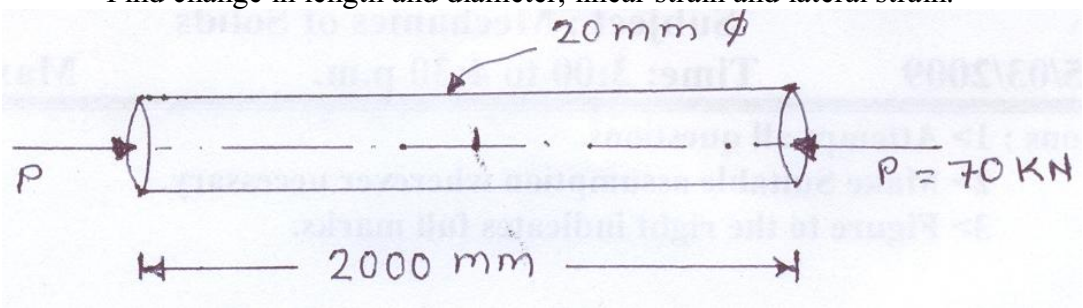

3. A simply supported beam carrying 2 KN/m Uniformly distributed load having 5 m length . Find out reaction at the support and draw S.F & B.M diagram.

Que.3 Attempt any two. (10)

(A) Define following terms.

1. Statics
2. Kinematics
3. Scalar quantity
4. Force
5. Collinear forces

(B) Explain types of equilibrium.

(C) A uniform bar of 10 mm diameter is subjected to different axial forces as shown in figure .Calculate total change in length of the bar.
Take $E = 2 \times 10^{5}$ N/mm^2

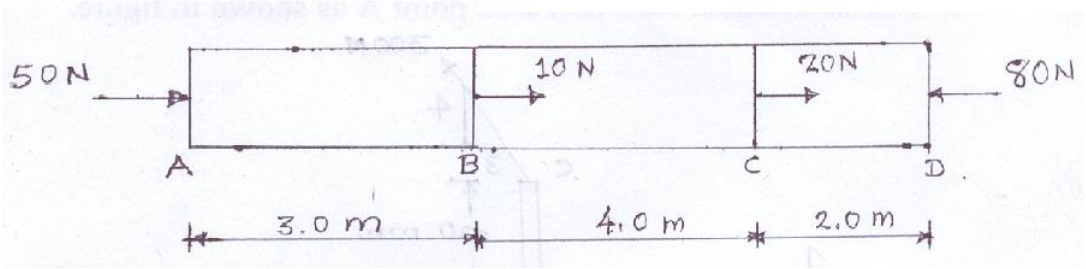

(D) A taper bar of length 2.5 m having 60 mm major diameter and 14 mm of minor diameter. Find the magnitude of force which can deform the bar by 0.6 mm and $E = 2 \times 10^{11}$ N/mm^2