A.Y.DADABHAI TECHNICAL INSTITUTE, KOSAMBA
MID SEMESTER EXAMINATION APRIL – 2009
APPLIED SCIENCE - 2 (CHEMISTRY)
SEMISTER-2

TOTAL: 40 MARKS

DATE: 08/04/2009 **TIME: 11:00 TO 12.30**
ENROLL. NO._____ **SUP.SIGN _____**

Q-1(A) Define the following terms.

(1) Atomic Number (2) Atomic mass (3) Electron Affinity (4) Electrolytes (5) Electrolysis (05)

(B) Give the Difference between Orbit & Orbital. (03)

OR

(B) Write the short note on H-Bond.

(C) Give the HUND'S Rule. (02)

OR

(C) Give the Auf-Bau Rule.

Q-2(A) Write the short note on Ionization Energy. (05)

OR

(A) Give the classification 0f Periodic table.

(B) Prove the equation for Ka. (03)

(C) Give the PH value of followings. (02)

(1) Oranges (2) Human blood (3) Sea water (4) Sour milk

Q-3(A) Explain any two process of Electrolysis. (05)

OR

(A) Write the short note on Degree of Ionization.

(B) Calculate the PH value of 0.02N NaOH Solution. (03)

(C) The Hcl Solution having the PH value of 3.4, so calculate the H_3O^+ ion concentration in it. (02)

Q-4(A) "EFFECT OF HARD WATER" Explain (05)

OR

(A) A sample of water contains following dissolve salts.
So calculate the total hardness.

$Ca(HCO_3)_2$ = 8.1 mg/liter $CaCl_2$ = 11.1 mg/liter
$Mg(HCO_3)_2$ = 29.2 mg/liter $MgSO_4$ = 6 mg/liter

(B) Give the method to express the hardness of water. (03)

(C) Give the difference between Hard water & Soft water. (02)

_____ BEST OF LUCK_____

A.Y.DADABHAI TECHNICAL INSTITUTE

CIVIL ENGG. DRAWING

Internal Examination-APRIL 2009

[Time : 2 Hours] [Total Marks : 40]

Enrolement. No. …… **Supervisor's Dated Initial ……**

1. (a) **Give the range of the scale for following drawings.(Any THREE)** 3
   (i) Topographical Map (ii) Site Plan
   (iii) Town Survey (iv) Enlarged Drawing
   (b) **Draw symbols for following as per IS-962.(Any THREE)** 3
   (i) Siren (ii) Ceiling Fan
   (iii) Concrete (iv) Man Hole.
   (c) **Write full form of abbreviation given below. (Any THREE)** 3
   (i) AGG (ii) RWP
   (iii) D.P.C. (iv) H.F.L.

2. (a) **Explain the principles of planning for Resi.bldg. (Any TWO)** 5
   (i) Privacy (ii) Roominess
   (iii) Grouping (iv) Circulation.
   (b) **State the building byelaws recommended by I.S.for the following. (Any FOUR)** 4
   (i) Rise & Trade (ii) Kitchen cum Store
   (iii) Bath (iv)(Habitable room) Living room
   (v) W.C.

3. **A residential building is to be planned for the plot having area 15m x18m. Following rooms are to be accommodated after leaving necessary margin. Select road side & north, yourself.**
   (i) Ground floor: Drawing room, Bed room, Dining space, Kitchen, Store, Bath, W.C. Staircase, Verandah etc.
   (ii) First Floor: Bed room (with attached toilet), Study room, Guest room, bath, W.C. Balcony etc.
   a) **Draw G.F. plan of the bldg. with suitable scale.**
   b) **Draw F.F. plan of the bldg.** 8
   c) **Draw suitable section showing necessary details & dimensions of above bldg.** 6
   8

A.Y.DADABHAI TECHNICAL INSTITUTE

ELECTRICAL CIRCUIT

Mid Term Examination for 2nd Semester April 2009

[Time : 1 ½ Hours] [Total Marks : 40]

Enrollment No. …… **Supervisor's Dated Initial ……**

Q :- 1 (a) Define and explain following Terms. [any five] (05)

(a) Specific Resistance.
(b) Active Element.
(c) MMF
(d) Reluctance
(e) Permeability
(f) Permeance.

(b) The following are details of the load on a circuit connected through supply. (03)

(1) 5 lamps of 60 watts each working for 3 hours/day.
(2) 3 lamps of 100 watts each working for 4 hours/day.
(3) Three tube lights of 40 watts each working for 4 hours/day.
(4) One 1500 watt heater working for 2 hours/day.

If each unit of energy cost at Rs. 2.75. What will be the total cost in the month of July?

(c) Explain Ohm's law with its limitations. (02)

Q :- 2 (a) Write and explain factors affecting Resistance. (03)

OR

(a) Derive the formula for finding equivalent resistance for (1) Series circuit and (2) Parallel Circuit.

(b) A parallel combination of resistances $R_1 = 4\Omega$, $R_2 = 6\ \Omega$ and $R_3 = 10\ \Omega$ is connected in series with 20 Ω resistance. (03)

Find out current flowing through each of above resistances. The whole circuit is put 200 volts. Also find total power loss of this circuit.

OR

Q :- 2 (a) Explain and derive equation of force between two parallel conductors. (03)

(b) A mild steel ring has mean circumference of 50cm and its area of cross – section is 6 cm^2. A coil of 250 turns is wound over it. Find (03)

(1) Reluctance of the Ring.
(2) Value of current to produce flux of 850 μwb. Assume relative permeability of mild steel as 380.

Q :- 3 (a) Write comparison between Electric Circuit and Magnetic Circuit. (04)

(b) Apply Kirchhoff's laws and find current and voltage drop across each resistors (or Element) of Figure given below:- (03)

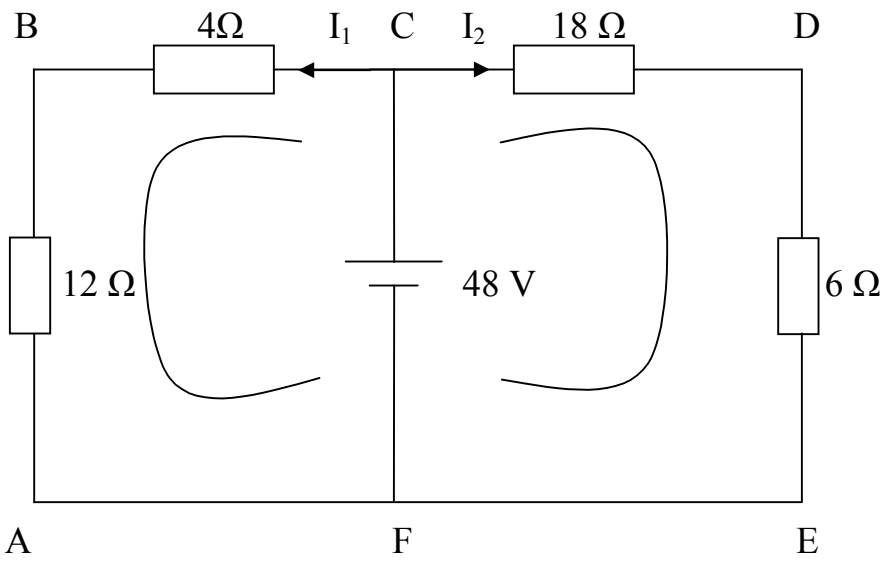

Q :- 4 (a) State and explain following. (06)

1. Faraday's laws of Electromagnetic Induction.
2. Fleming's left hand rule.
3. Lenz's law.

(b) Write and explain Kirchhoff's (both) laws. (03)

Q :- 5 Write short notes. [Any four] (08)

1. Explain statically induced EMF and dynamically induced EMF.
2. Explain difference between EMF and Potential Difference [PD].
3. Explain conductors, semiconductors and insulators.
4. Write and explain Flemings Left hand rule and cork screw rule
5. Mutually induced EMF.

BEST OF LUCK

A.Y.DADABHAI TECHNICAL INSTITUTE, KOSAMBA
MID TERM EXAMINATION APRIL-2009
ELEMENTS OF MECHANICAL ENGG.

DATE: 15/04/09 **TIME: 11:00 TO 12:30**

ENROLL NO. _____ **SUP.SIGN _____**

Que 1. Draw a neat sketch of any pump of following. Explain the working principle & constructional features of the pump.
(A) Centrifugal Pump (B) Reciprocating Pump **(07)**

Que 2. List of any four faults observed in Centrifugal pump. State the causes and remedies of the fault. **(07)**

Que 3. Define "Priming". **(02)**

Que 4. State the functions of Air vessal in Reciprocating pump. **(04)**

Que 5. What is the need of Material handling? List the five types of Material handling Equipments. **(05)**

Que 6. Derive the equation of belt tension ratio for belt drive. **(05)**

OR

Que 6. Define the Gear train and explain any one of them with Fig. **(05)**

Que 7. State personal safety and tool safety in shop. **(05)**

Que 8. Calculate the width of the flat belt based on following. **(05)**

- Power transmitted 22KW
- Diameter of pulley 1mtr
- Pulley rpm 300
- Angle of Lap 165˚
- Co-efficient of friction 0.3
- Thickness of Belt 9mm
- Stress of Belt Material 2.3 N/mm^2

_____ BEST OF LUCK _____

A.Y.DADABHAI TECHNICAL INSTITUTE

ELEMENTS OF CIVIL ENGINEERING

Internal Examination-APRIL 2009

[Time: 1 1/2 Hours] [Total Marks : 40]

Enrolement. No. …… **Supervisor's Dated Initial ……**

Q.1 (A) **State the instruments used in chain and tape survey. Write the uses of Five.** 5

(B) **Define Base Line and Tie Line.** 2

(C) **Convert following W.C.B. to R.B.** 3

1. **181°**
2. **45°**
3. **155°**

Q.2 (A) **Draw the sketch of a Prismatic Compass and lable it.** 4

(B) **Following are observed fore bearing and back bearing of Traverse PQRS.** 6

Line	F.B.	B.B.
PQ	100°	280°
QR	45°	222°
RS	260°	83°
SP	220°	40°

Find out correct bearings and calculate included angles.

Q.3 (A) **Write the purpose of Levelling.** 4

(B) **Following readings were taken on continuous sloping ground.Determine Reduced level of all the points and show arithmetical check.** 6

2.5, 0.3, 1.56, 2.355, 0.85, 2.3, 3.1 and 3.6

Q.4 (A) **The first reading taken on bench mark of RL = 50.** 5

(1) Write full form of following abbreviations.

R.C.C., D.P.C., H.F.L., W.C., M.H.

(2) Sketch symbol for following.

(B) **Brick work, Concrete, Plaster, Glass, Wood.** 5

Define : -

1. **Levelling**
2. **Bench mark**
3. **Line of collimation**
4. **Reduced level**
5. **Change point**

A.Y.DADABHAI TECHNICAL INSTITUTE

FUNDAMENTAL OF ELECTRICAL ENGG. (FEE)

Mid Term Examination for 2nd Semester April 2009

[Time : 1 ½ Hours] [Total Marks : 40]

Enrollment No. …… **Supervisor's Dated Initial ……**

Q :- 1	**A**	Compare Electric Circuit with Magnetic Circuit.	**(05)**
	B	Define and explain following (a) Amplitude (b) Frequency (c) Form Factor (d) RMS value (e) Average Value	**(05)**
Q :- 2	**A**	Give difference between EMF & PD.	**(02)**
	B	Explain Faraday's law of electro magnetic induction.	**(03)**
Q :- 3	**A**	Define DC Generator and also explain working principal of a DC Generator.	**(03)**
	B	Classify DC Generator & Explain any one from that with its application.	**(03)**
		OR	
Q :- 3		Explain different parts of a DC Machine with proper diagram.	**(06)**
Q :- 4	**A**	Explain Dynamically and Statically induced emf.	**(03)**
	B	Explain (i) Fleming's Right Hand Rule and (ii) Lenz's law.	**(03)**
Q :- 5	**A**	Explain Stair Case wiring with suitable diagram.	**(02)**
	B	Why earthing is require in electrical wiring? Explain any one method of earthing.	**(03)**
Q :- 6		Write short notes (Any Four) 1. ELCB 2. Leakage Coefficient and Leakage Flux 3. Explain Commutator 4. Self and Mutually Induced emf 5. Types of Domestic Wiring	**(08)**

Best of Luck

A.Y.DADABHAI TECHNICAL INSTITUTE

MATHEMATICS - II

Mid Term Examination for 2nd Semester April 2009

[Time : 1 ½ Hours] [Total Marks : 40]

Enrollment No. …… **Supervisor's Dated Initial ……**

Que 1 **(A)** If the area of the triangle with the vertices (3,k), (9,3) and (5,2) is 7 sq. units then find the value of k. **(03)**

(B) If the (k,-3), (1,3) and (3,7) are the collinear points then find the value of k. **(03)**

(C) In which ratio does (i) the X-axis (ii) Y axis divides the line segment joining the points (2,2) and (-7,6). **(03)**

(D) A(6,7) and B(2,3) are two fixed points. P moves in such a way that the area of Δ PAB is always 10 sq. units. Then find the locus of P. **(05)**

OR

Que 1 **(A)** If the area of the triangle with the vertices of (2,3), (4,5) and (m,3) is 5 sq. units find the value of m. **(03)**

(B) If the points (1,a), (2,3) and (-5,6) are collinear then find the value of a. **(03)**

(C) A variable points P moves in such a way that it satisfies the condition $PA^2+PB^2=44$ where A(-3,2) and B(3,-2) are given fixed points. Find the equation of the locus of P. **(03)**

(D) Find the trisection of points of the line segment joining the points (4,5) and (13,-4). **(05)**

Que 2

(A) Evaluate : $\lim_{x\to 1}\frac{x^4+x^3-x^2-5x+4}{x^3-x^2-x+1}$ **(04)**

(B) Evaluate : $\lim_{x\to 1}\frac{\sqrt{x+7}-\sqrt{3x+5}}{\sqrt{3x+5}-\sqrt{5x+3}}$ **(03)**

(C) Evaluate the following : **(06)**

1. $\lim_{x\to 0}\left(1+\frac{3x}{4}\right)^{\frac{5}{x}}$
2. $\lim_{x\to 0}\frac{a^x-b^x}{x}$
3. $\lim_{x\to \frac{\pi}{2}}\frac{1-\sin x}{\left(\frac{\pi}{2}-x\right)^2}$

OR

Que 2

(A) Evaluate : $\lim_{x\to 2}\frac{x^3-6x^2+11x-6}{x^3-8}$ **(04)**

(B) Evaluate : $\lim_{x\to\infty}\sqrt{x}\left(\sqrt{x+p}-\sqrt{x}\right)$ **(03)**

(C) Evaluate the following : **(06)**

1. $\lim_{x\to 0}\left(1+\frac{5x}{7}\right)^{\frac{2}{x}}$
2. $\lim_{\theta\to 0}\frac{\operatorname{cosec}\theta-\cot\theta}{\theta}$
3. $\lim_{\theta\to 0}\frac{\sin m\theta}{\sin n\theta}$

Que 3 **(A)** Using the first principal find the derivatives of the following function $\sqrt{x}$ with respect to x. **(03)**

(B) Differentiate the following w.r.t. x **(03)**

$$\frac{\sec x+\tan x}{\sec x-\tan x}$$

(C) Obtain $\frac{dy}{dx}$. **(03)**

y= $e^{\sin x}\sec 2x$

(D) Obtain $\frac{dy}{dx}$. **(04)**

y= $\log\sqrt{\frac{1+\sin x}{1-\sin x}}$

OR

Que 3 **(A)** Using the first principal find the derivatives of the following function e^x with respect to x. **(03)**

(B) Differentiate the following w.r.t. x **(03)**

$$\frac{3\sin x+4\cos x}{2\cos x-3\sin x}$$

(C) Obtain $\frac{dy}{dx}$. **(03)**

y= $\cos(\sin 2x)$

(D) Obtain $\frac{dy}{dx}$. **(04)**

y= $\log_e \tan\left(\frac{x}{2}+\frac{\pi}{4}\right)$

Best of Luck

A.Y.DADABHAI TECHNICAL INSTITUTE, KOSAMBA.
MID SEMESTER EXAMINATION APRIL -2009
MECHANICAL DRAFTING

DATE: 15/04/09 **TIME: 11:00TO 1:00**

ENROLL. NO_____ **SUP.SIGN_____**

Q-1 Draw projection of square prism having side of base 30mm and axis 60mm long is resting on one of its side of base on H.P. The side on which it rest on H.P.makes an angle of 45^0 with V.P. and axis of prism makes an angle of 30º with H.P. Draw projection of prism. **(07)**

OR

Q-1 A regular hexagonal pyramid side of base 25mm and height 70mm is resting on H.P. on one of its triangular face. The side of that triangular face makes an angleof 30º with V.P. draw projection of pyramid. **(07)**

Q-2 A cone of 50mm diameter and 70mm high is resting on its base on H.P. A sectional plane perpendicular to H.P. and inclined at 60º to V.P. cuts the axis of cone at a distance of 8mm.Draw sectional elevation and true shape of section.

OR **(07)**

Q-2 A cylinder of 55mm base diameter and 75mm height is resting on H.P. on its base. Its cut by a sectional plane inclined at 45º to H.P. passing at a distance of 35mm from the base. Draw sectional elevation and true shape of the section. **(07)**

Q-3 Draw the development of surfaces of any one from the fig1 & 2. **(07)**

Q-4 Draw following views for the fig 3. (1) The sectional elevation at section B-B. (2) The sectional top view at section A-A. (3) Left hand side view. **(07)**

Q-5 (a) Draw welding symbol of any two from the following.
Spot weld, seam weld, single 'U' butt, single 'J' butt weld. **(02)**

(b) Draw piping symbol of flange type of any four from the following.
Reducer, union, safety valve, elbow 45º, lateral, tee joint, coupling. **(04)**

(c) Draw welding symbol showing all the details. **(03)**

(d) Draw surface roughness symbol and write all the details included. **(03)**

_____ BEST OF LUCK_____

A.Y.DADABHAI TECHNICAL INSTITUTE, KOSAMBA

MID TERM EXAMINATION APRIL-2009

Electronic Devices & Ckt-1(320017)

DATE: **TIME: 11:00 TO 12:30**

ENROLL NO. _____ **SUP.SIGN_____**

Que:1 Explain the following terms (Any four) **10**

1) Doping
2) Ripple factor
3) Peak inverse voltage
4) Depletion layer
5) Drift current

Que:2 Explain difference between(Any two) **10**

1) Forward bias and Reverse bias of p-n junction diode
2) Avalanche and Zener breakdown
3) Full wave centre tap rectifier and bridge rectifier
4) Transition capacitance and Diffusion capacitance

Que:3 (Any two) **10**

1) Derive relation between β and α .Also derive α_{dc} and β_{dc}.
2) Explain i/p and o/p characteristics of CE amplifier.
3) Explain transistor as a switch.
4) How does transistor work as an amplifier

Que:4 (Any two) **10**

1) Determine voltage Va in the ckt shown in figure(a). Assume suitable voltage drops of diode

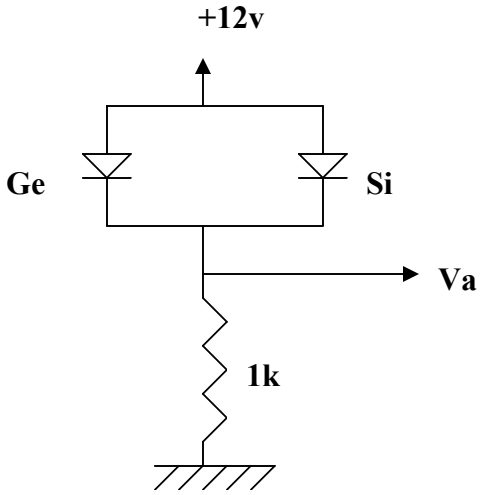

Fig.(a)

2) Draw the output waveform of following ckt

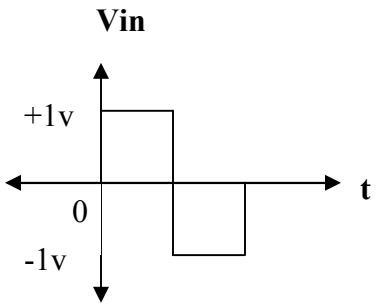

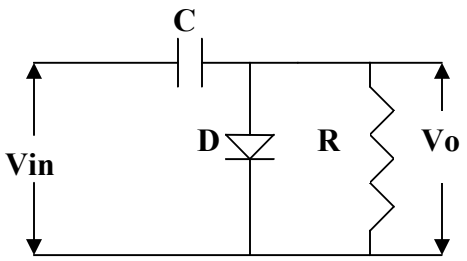

3) A triangular voltage shown in figure below is applied to the bias clipper ckt shown in figure .Determine the wave shape of output voltage

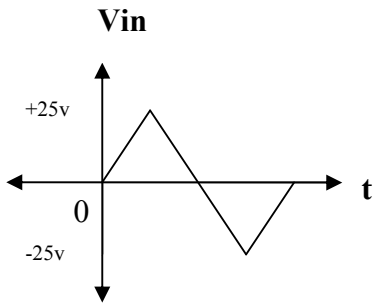

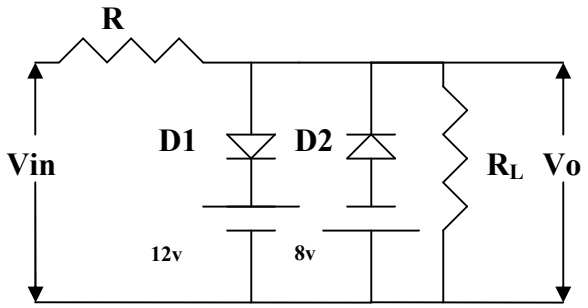

A.Y.DADABHAI TECHNICAL INSTITUTE, KOSAMBA
MID SEMESTER EXAMINATION APRIL – 2009
N.C.E.S
SEMISTER-2

TOTAL: 40 MARKS

DATE: **TIME: 11:00 TO 12.30**
ENROLL. NO._____ **SUP.SIGN _____**

Q-1 (A) Give the difference between Conventional & Non-conventional energy sources. (05)
(B) Write the short note on Solar Energy. (05)
OR
(B) Write the short note on Bio-mass Energy.

Q-2 (A) Define the following terms. (05)
(1) Wind velocity (2) Wind Speed (3) Wind mill
(B) Briefly describe the measurement of Wind direction & Wind speed. (05)
OR
(B) Briefly Discuss the meterological purformation required for locating a wind mill. (05)
(C) What is Anemometer? Mention its different types & describe any one of them giving neat sketch. (05)
(D) Develop on equation for Wind power & its significance. (05)
OR
(D) Discuss Advantages & Dis-Advantages of Wind power.

Q-3 (A) Develop all equations for Energy & Power for single basin tided system. (05)
OR
(A) Discuss merits & demerits of Hydro power plant.
(B) Write the short note. (Any two) (05)
(1) Vapour dominated system.
(2) The flashed steam system.
(3) Binary cycle system.

BEST OF LUCK

A.Y.DADABHAI TECHNICAL INSTITUTE, KOSAMBA

MID TERM EXAMINATION APRIL-2009

Programming in 'C'(320016)

DATE: **TIME: 11:00 TO 12:30**

ENROLL NO. _____ **SUP.SIGN_____**

Que :1 Attempt following questions:

(1) Why 'C' is called middle level computer language? **(2)**

(2) What is flow chart? Draw flow chart for a program to find maximum number between three numbers. **(3)**

(3) Explain data types of 'C'.Also give the name of basic data types with their types, range and size in bytes. **(5)**

Que:2 (A) Attempt any three of the following. **(6)**

(1) Explain following assembler directives.
   (a) #include
   (b) #define
(2) What the main difference is between postfix and prefix increment operator?
(3) Why there is a break statement is necessary in switch - case statement.
(4) What is use of type casting? Give example.

(B) Attempt any one of the following **(4)**

(1) Explain if-else statement with example.
(2) Explain nested for loop with example.

Que:3 (A) Distinguish between (any one). **(3)**

(1) Ladder if-else & nested if-else.
(2) For loop & while loop.

(B) Solve any three. **(4)**

(1) 50/3 % 3+5*7
(2) (25/3)*4-10%3+9/2
(3) 55%7*6-5*4/3
(4) (11/4*3)-(19%4+9/2)

(C) What is o/p of the following program?(any one) **(3)**

(1)
```
int a,b,c;

a=2;
b=5;
a++;
b--;
c=b--;
printf("%d %d %d\n",a,b,c);
printf("%d %d \n",a++,b++);
```

(2)
```
main()
{
   int x=4;
   do
      {
       x-=2;
       printf ("x=%d,/",x);
       }
while (x>=1)
}
```

Que:4 Attempt any two of the following **(10)**

(1) Write a program to convert the given temperature in Fahrenheit to Celsius & vice-versa
(2) Using if & go to statement ,write a program to print largest number from given N integer numbers.
(3) Write a program to print given integer in reverse.i.e. reverse of 1234 is 4321.

BEST WISHES