BHAGVAD GOPAL INSTITUTE OF TECHNOLOGY

MID SEM EXAM-2009

320016-Prog. In 'C'

Date: **Time: 1:30 Hrs**

En. No.: **50 Marks**

Q-1 (A) Explain Program Solving Methods. [5]

(B) Explain Types 0f Programming languages. [5]

OR

Q-1 (A)Write an algorithm to find the maximum value for three given numbers. [5]

(B) True Or False [5]

1. Algorithm is a stepwise solution of a problem.
2. Sequential program are simple and unable to solve real problems.
3. Algorithm is pictorial representation of flowchart.
4. Modularity is important component of higher level language.
5. 'C' is a higher level language.

Q-2 Attempt any Two. [10]

(A)Write the features of 'C' language.

(B) Short Note :(Any Two)

1. Identifiers 2. Keywords 3. Variables

(C) Explain Data types available in 'C' language.

Q-3 (A) Write a program to compute simple interest I=PRN/100. [5]

(B)Write a program to find number is odd or even. [5]

OR

Q-3 Write program to compute income-tax when total income is given below. [10]

INCOME	TAX
0-20000	-
20001-40000	5%
40001-60000	10%
60001-80000	15%
80001 or above	20%

Total Tax to be payable is calculate by adding 10% surcharge to the tax computed using above table.

This PDF was created using the Sonic PDF Creator.
To remove this watermark, please license this product at www.investintech.com

Q-4 (A) Give difference between while & do-while. [5]

(B)Give difference between break and go to. [5]

OR

Q-4 Write a program to read 10 marks & check how many of them positive or negative. [10]

Q-5 (A) Describe the Array. [5]

(B)Describe the following.(Any Two)

1. Operators 2. Puts & Gets 3. 'C' character set [5]

This PDF was created using the Sonic PDF Creator.
To remove this watermark, please license this product at www.investintech.com

BHAGVAD GOPAL INSTITUTE OF TECHNOLOGY

MID SEM EXAM-2009

320001-MATHS-II

Date: **Time: 2:00 Hrs**

En. No.: **50 Marks**

Q-1 Solve Any Two. [10]

(1) Find the circumcentre and circum-radius of the triangle having vertices (1,2),(3,4) and (2,1)

(2) If (-1,-2),(1,-4) and (6,-1) are the three vertices of a parallelogram, find its forth vertex.

(3) A(6,7) and B(2,3) are two fixed points and a point 'p' moves in such a way that the area of ΔPAB is always 10aq. Units . Then find the locus of 'p'.

Q-2

(1) Find the equation of the line passing through the point (-1,-2) and perpendicular to the line

$$\frac{x}{3} + \frac{y}{4} = 1$$

(2) Parallel and perpendicular straight lines and relations betn their slopes.

Q-3 Solve Any Two [10]

(A) $\lim x \to \infty$

$$\left(\sqrt{x^2+2x} - \sqrt{x^2-3} \right)$$

(B) (i) if $f(x) = \frac{1}{1+x}$, then

$$f(x) + f(1/x) = 1$$

(ii) if f(x) = tanx then prove

$$f(x+y) = \frac{f(x) + f(y)}{1 - f(x) \cdot f(y)}$$

Q-4 Solve Any Two [10]

(1) if $y = f(x) = \sqrt{x}$, get $\frac{dy}{dx}$ by it's defination.

This PDF was created using the Sonic PDF Creator.
To remove this watermark, please license this product at www.investintech.com

(2) find derivative $f(x) = x^3 - 2x$ with defination.

(3) find derivative of $f(x) = \sin x$

Q-4 Solve Any Two [10]

(1) find $\frac{a^2y}{dx^2}$ of $a^2x^2 + b^2y^2 = a^2b^2$

where a , b are constants

(2) $y = \log\sqrt{\frac{a+x}{a-x}}$

find $\frac{dy}{dx}$

(3) find differentiation of parametric functions. With respect to x derivative with X.

(A) $x = a\sin\theta$, $y = a(1+\cos\theta)$

(B) $x = a(\theta + \sin\theta)$, $y = a(1 - \cos\theta)$

This PDF was created using the Sonic PDF Creator.
To remove this watermark, please license this product at www.investintech.com

BHAGVAD GOPAL INSTITUTE OF TECHNOLOGY
MID SEM EXAM-2009

Date:
Time: 1:30 Hrs
50 Marks

Sub: E.C.
Sub Code: 320009

Q-1 (A) Define the Terms and Explain it's Equation and Unit. [5]
(1) Electric current (2) Resistance
(B) Explain Conductor, Insulator and Semi conductor. [5]
OR
(B) Explain Specific Resistance.

(C) Find the Resistance of a Copper wire of length 10 m and Diameter of 5mm. Specific Resistance Of 5mm. Specific Resistance of copper is 1.7×10^{-8} ohm m. [5]

Q-2 (A) Explain the terms. (Any Two) [5]
(1) MMF (2) Reluctance (3) Flux Density
OR
(A) An iron ring has a mean diameter of 25 cm. and a cross section section of 4cm*3cm. A coil of 400 turns is wound on the ring. Flux of 1.5mwb is produced when the coil carries of 1.8A. Calculate,
a. Absolute and Relative Permeability of iron.
b. Reluctance of the circuit.
(B) Explain the magnetic field of current carrying conductor. [5]
OR
Write the laws of Kirchhoff and explain any one.

Q-3 (A) Explain Faraday's laws of Electromagnetic Induction. [5]
(B) State conditions for Production of dynamically Induced E.M.F. [5]
OR
Explain coupling co-efficient.

Q-4 (A) State law of Coulomb. [5]
(B) Define the terms. [5]
1. Electric Field
2. Electric Potential
3. Permittivity
4. Electric Field Strength
5. Electric Flux

(C) What is Capacitor? Explain parallel connection of capacitor. [5]
OR
Two plates of each of 400mm X 300mm are spaced 2mm apart in air. Calculate the capacitance formed. If the space between the plates is filled with the dielectric material having permittivity of 6, find the increase in the capacitance.

This PDF was created using the Sonic PDF Creator.
To remove this watermark, please license this product at www.investintech.com

BHAGVAD GOPAL INSTITUTE OF TECHNOLOGY
MID SEM EXAM-2009

Date:
Time: 1:30 Hrs
50 Marks

Sub: AS-II
Sub Code: 320002

Q-1 Answer the following questions. [20]

(1) Write the electronic configuration of following.

a) 26Fe b) 17Cl

(2)PH scale for the strong acid is_____ and for strong base is _____ .

(3)Write the structure formula for following polymer.

a)P.V.C. b)Polythene c)Terylene d)Neoprene

(4)calculate the PH of 0.001 m CL solution.

(5)Explain bond formation in ccl_4 .

(6)Define the term "PH" and explain it's importance.

(7)Define the term

A) Ionization energy b) electron affinity

(8)Explain Hund's Rule with suitable example.

(9)Explain Auf-bau principal

(10)explain electron configuration of $_{18}^{Ar\ 40}$.

Q-2(A) Answer the following questions. [4]

(1)Energy of electron is _____ in 3d orbital than 4s.

(2) Crystal of Al is _____type.

(3)N-type semiconductor s made by adding the impurity of _____ in the Ge or si.

(4) Electron affinity of chlorine atom is _____ than florin atom.

This PDF was created using the Sonic PDF Creator.
To remove this watermark, please license this product at www.investintech.com

(B) Answer the following questions. [6]

(1)Explain the difference between paint & varnish.

(2)Explain deffination of buffer solution with suitable example.

(3)Explain “Co-valent” bond with suitable example.

Q-3 (A) Calculate the PH of 0.001 m H_2SO_4 solution. [2]

(B) Attempt Any Three [9]

(1)Explain factor affecting on degree of ionization.

(2)Difference between paint and Varnish.

(3)Explain the characteristic of good paint.

(4)Difference between Natural and Synthetic rubber.

Q-4 Attempt any three. [9]

(1)Explain P-Type semi-conductor.

(2)Calculate the ionization constant (ka) for weak acid.

(3)Explain used formaldehyde with structure, character and importance.

(4)Explain Epoxy resin with structure, character and importance.

This PDF was created using the Sonic PDF Creator.
To remove this watermark, please license this product at www.investintech.com

BHAGVAD GOPAL INSTITUTE OF TECHNOLOGY

MID SEM EXAM-2009

320006-C.E.D

Date: **Time: 2:00 Hrs**

En. No.: **50 Marks**

Q-1 (A) State Suitable scales applicable for following drawing. [5]

1)Layout Plan 2)Index Map 3)Topographical Map
4)Town Survey Map 5)Key Plan

(B)Write Full-Form for the following (Any three). [3]

1) AGG 2)BBCC 3)RCC 4)RWP 5)DPC

(C)Draw Symbols for the following (Any three). [3]

1)Exhaust fan
2) Siren
3) Gully trap
4) Shower head
5) Water Meter

Q-2 (A) Select correct answer from "B" and match with "A". [5]

A	**B**
1)Minimum area of habitable	1)2.2 m
2)Minimum height of a room	2)9.5 m^2
3)Minimum area required for a bicycle parking	3)25 cm
4)Minimum head room in any sector case	4)2.0 m
5)Minimum plinth height for a house	5)2.4 m^2
	6)7.5 m^2
	7)1.4 m^2
	8)25 m^2
	9)30 m^2
	10)5.0 m^2
	11)2.5 m^2
	12)2.75 m^2
	13)15 m^2
	14)3.0 m^2
	15)1.5 m^2

This PDF was created using the Sonic PDF Creator.
To remove this watermark, please license this product at www.investintech.com

Q-2 (B) Explain aspects and prospect diagram with figure. [4]

Q-3 which paint will you keep in your mind at the time of selection of a Plot on a slopping ground? [5]

Q-4 write short note on any two of the following. [5]

1) F.S.I.
2) F.S.R.
3) Plinth
4) Planning of low cost house

Q-5 [20]

An owner of a land having a plot of 10m X 20m size on 10m wide road in front of a rose garden (The road and rose garden are in south direction of the plot and 10m width is parallel to the road side) wants to consult a bungalow prepare a ground floor is floor plan in detail with one living room one bad room, one kitchen, one store room stair case cabin, bathroom,w.c.

Draw: Plan, Elivation, Section.

This PDF was created using the Sonic PDF Creator.
To remove this watermark, please license this product at www.investintech.com

BHAGVAD GOPAL INSTITUTE OF TECHNOLOGY

MID SEM EXAM-2009

320007-Elements of Civil Engineering

Date: **Time: 1:30 Hrs**

En. No.: **50 Marks**

Q-1 (A) Enlist Instruments required for chain and tape survey with their use. [5]

(B) Write Note on Followings(Any Two) [3]

1. Base Line 2.Tie Line 3. Check Line

(C) Write meaning of the following. [2]

1. DPC 2.GL 3.CS 4.RCC

Q-2 (A) Write Short Note on Followings. [5]

1. Map 2.Types of Map 3.Use of Map

(B)Difference between Map & Plan. [3]

(C)Write Symbols of following (Any Four). [2]

1. Brick work 2.Road in cutting 3.Glass 4.Plaster 5.Man Hole

Q-3 (A) Principals of Surveying. [7]

(B) Give Conventional Signs (Any Six). [3]

1. Chain Line 2.Metelled Road 3.Pipe Line 4.Shed Open 5.Gate
6.Church 7.Railway Bridge

Q-4 (A) Considerations for selecting site for Industrial shed. [7]

(B) Explain Third Angle Method of Projection. [3]

Q-5 (A) Provisions of Bye-Laws Related to Industrial Buildings in I.S. [7]

(B) Write purpose of Bye-Laws. [3]

This PDF was created using the Sonic PDF Creator.
To remove this watermark, please license this product at www.investintech.com

BHAGVAD GOPAL INSTITUTE OF TECHNOLOGY

MID SEM EXAM-2009

Date:
Time: 1:30 Hrs
50 Marks

Sub: EDC-1
Sub Code:

Q-1 (A) Classify the method of power transmission with suitable example of each type [5]

(B) Explain the method of Gas welding or arc welding in brief [5]

OR

Explain brazing (Process, Method, Advantages, Uses)

Q-2 (A) Give types of flat belt-drive, Explain open and cross belt drive. [5]

(B) Explain soldering in brief. [5]

Q-3 (A) Explain working principle of two stroke & four stroke engine.

This PDF was created using the Sonic PDF Creator.
To remove this watermark, please license this product at www.investintech.com

BHAGVAD GOPAL INSTITUTE OF TECHNOLOGY

MID SEM EXAM-2009

Date:
Time: 1:30 Hrs
50 Marks

Sub: EDC-1
Sub Code: 320017

Q-1 Define the following terms.[any five] [5]

1. Knee Voltage
2. Break Down Voltage
3. Peak Inverse Voltage
4. Ripple Factor
5. Clipper Circuit
6. Diffusion Current

Q-2 Explain formation of deplation layer in PN junction diode. [4]

OR

Give types of capacitance in PN junction diode & explain each.

Q-3 Explain in brief Bridge Rectifier. [5]

OR

Draw circuit diagram of Half wave rectifier. Also write it's parameters &derive equation for any one parameter.

Q-4Types of clipper circuit. Explain positive &negative series biased clipper circuit. [5]

OR

Explain in brief diode clamper circuit.

Q-5 Give applications of varactor diode, zener diode & Tunnel diode [5]

Q-6 Define current gain, alpha & bita of transistor and obtain relation between them. [6]

OR

Compare CB ,CC &CE Amplifier.

Q-7 Compare HW & FW Rectifier. [4]

Q-8 Write Short notes. [any Four] [16]

1. Darlington pair
2. Photo Transistor
3. Tunnel diode
4. LDR
5. Seven Segment Display

This PDF was created using the Sonic PDF Creator.
To remove this watermark, please license this product at www.investintech.com

BHAGVAD GOPAL INSTITUTE OF TECHNOLOGY

MID SEM EXAM-2009

Date:
Time: 1:30 Hrs
50 Marks

Sub: Fundamental of Electrical Engineering
Sub Code: 320004

Q-1 Define (Any Ten) [10]

1. EMF
2. Current
3. Permeability
4. Reluctance
5. Leakage Factor
6. Cycle
7. Instantaneous Value
8. Maximum Value
9. RMS Value
10. Crest Factor
11. Resistance

Q-2 Write any two. [10]

1. State and Explain Faraday's law of Electro magnetic Induction.
2. Comparison between electric & magnetic circuit.
3. State and explain Right hand rule.

Q-3 Write any two. [10]

1. State and Explain various losses in x'mer.
2. Define magnetic hysteric and explain hysteric loop .
3. Explain composite magnetic circuit.

Q-4 Describe Example: [20]

1. A ring of mean diameter 20cm is wound with 200 turns and carrying a current of 4A. The cross-sectional area of magnetic material of the ring is 15 cm^2 and relative permeability is 800. Determine the flux passing through it.

2. An iron ring is 15 cm in diameter and 10 cm^2 in cross-section area is wound with 200 turns of wires. For a flux density of 1 wb/m^2 and a permeability of 500 find the exciting current.

3. An iron ring has mean diameter of 500 mm and c/s area of 40 X 50 mm^2 . A coil of 400 turns is wound on the ring flux of 1 mwb is produced when the coil carries a current of 1.5A. Calculate relative permeability of iron and reluctance of the circuit.

4. An A.C. voltage is expressed as 200sin (314t-60). Find phase, amplitude RMS value frequency.

This PDF was created using the Sonic PDF Creator.
To remove this watermark, please license this product at www.investintech.com

BHAGVAD GOPAL INSTITUTE OF TECHNOLOGY
MID SEM EXAM-2009

Date:
Time: 1:30 Hrs
50 Marks

Sub: M.D.
Sub Code: 320008

Q-1 (A) Define the following. [5]

(1)Fundamental deviation.

(2)Limit

(3)Interference

(4)Max clearance

(5)Transition fit.

Q-1 (B) Answer the following question.

(1)Describe the methods of obtaining required fit. [3]

(2) Difference between hole bases system and shaft bases system. [2]

Q- 2 A regular pentagonal prism having 25mm sides & 70 mm height of axis is standing on HP with one side perpendicular to V.P. Its axis makes 45 degree angle with H.P. and top view of axis makes 30 degree angle with V.P. draw the projections. [15]

OR

A cylinder with 50mm diameter and 65mm height of axis is rest on one point of base circle on H.P. It's axis is inclined at 30 degree angle with H.P. and 60 degree angle with V.P. Draw the projections of the cylinder.

Q-3 Draw the assembly drawing of knuckle joint following fig (1) of detail drawing. [15]

Q-4 List computer commands you will use to produce fig (2) in Auto cad. [10]

This PDF was created using the Sonic PDF Creator.
To remove this watermark, please license this product at www.investintech.com

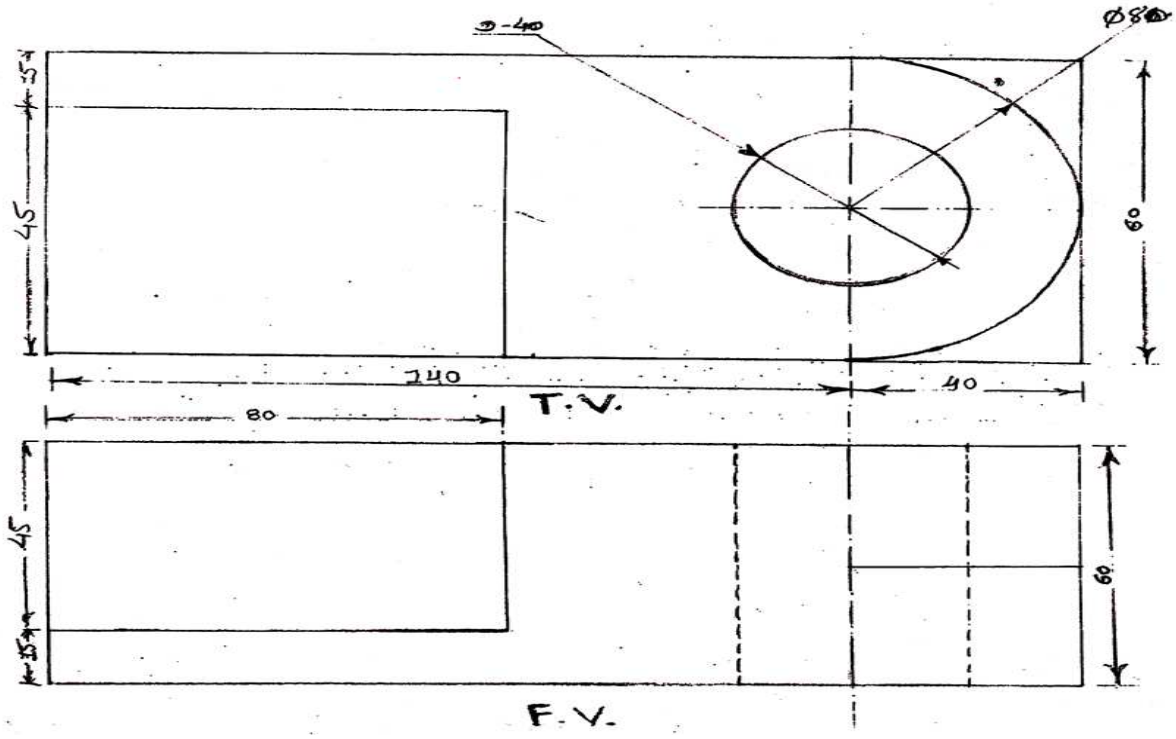

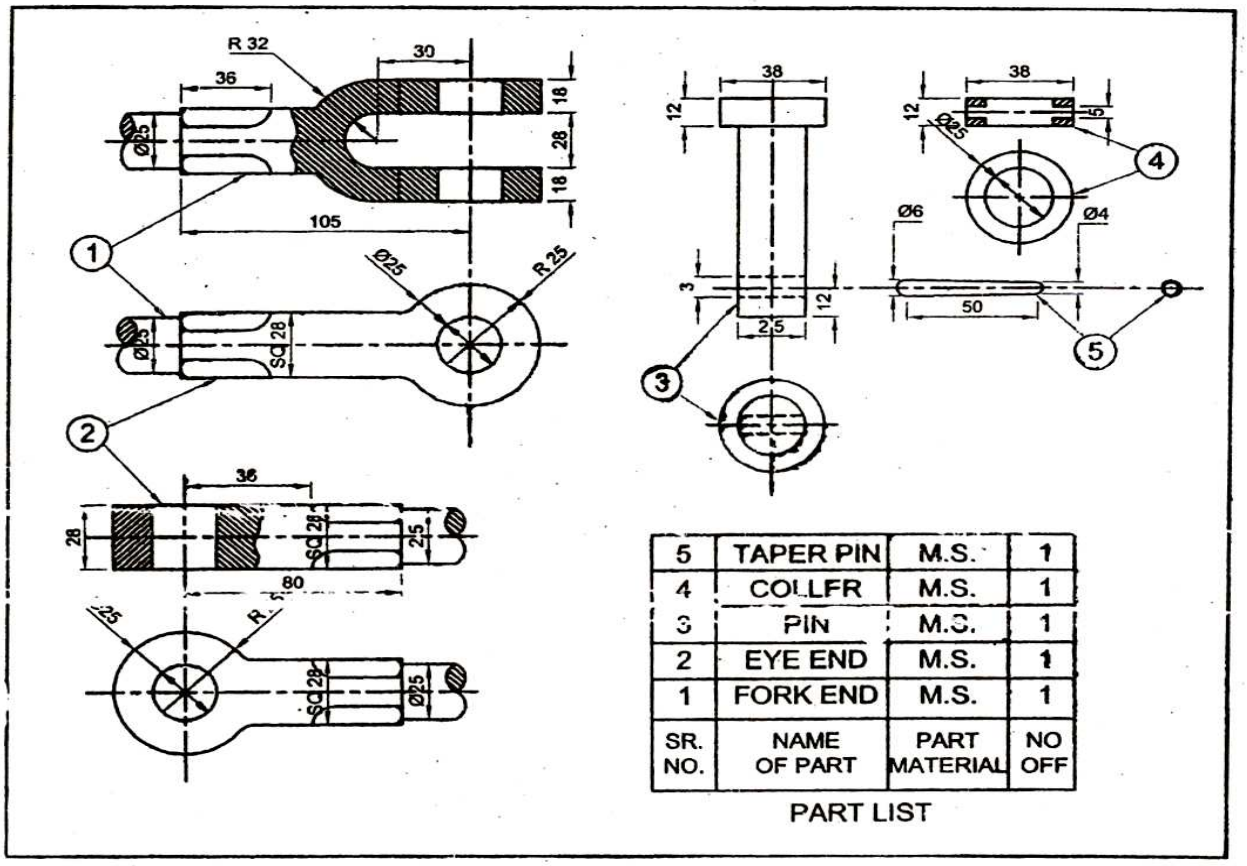

SR. NO.	NAME OF PART	PART MATERIAL	NO OFF
5	TAPER PIN	M.S.	1
4	COLLER	M.S.	1
3	PIN	M.S.	1
2	EYE END	M.S.	1
1	FORK END	M.S.	1

PART LIST

This PDF was created using the Sonic PDF Creator.
To remove this watermark, please license this product at www.investintech.com

BHAGVAD GOPAL INSTITUTE OF TECHNOLOGY
MID SEM EXAM-2009

Date:
Time: 1:30 Hrs
50 Marks

Sub: E.M.E.
Sub Code: 320003

Q-1 (A) Classify the method of transmission with suitable example of each type. [5]

(B) Explain the method of gas welding or arc welding in brief. [5]

OR

Explain Brazing. (It's process, method, advantages & uses)

Q-2 (A) Give types of Flat belt-drive. Explain Open & Cross belt drive. [5]

(B) Explain Soldering in brief. [5]

Q-3 (A) Explain Working Principle of Two Stroke & Four Stroke Engine. [5]

(B) Difference between: [5]

(1) Air cooling & Water cooling.

(2) Petrol Engine & Diesel Engine.

Q-4 Attempt Any Two: [10]

(1) Give types of gear trains. And explain in brief.
(2) Explain chain drive in brief.
(3) Give definition of Accident. Causes of accident and their remedies.

Q-5 (A) Give the definition and description of I.C. Engine. . [5]

(B) Draw the figure of I.C. Engine with its various parts and display its name also. [5]

This PDF was created using the Sonic PDF Creator.
To remove this watermark, please license this product at www.investintech.com