75

DR. S. & S. S. GHANDHY COLLEGE, SURAT.
INTERNAL EXAM : April – 2009 8/4/09
SUB: - Organic chemistry (320011) 2.00 - 3.00

En.Roll no:- _____ **Sign of supervisor: -** _____
Branch: _____

A.Fill in the blanks **05**

(1) Mixture of two or more volatile liquid is purified by _____
(2) Temperature at which solid substance melts sharply is called _____
(3) Organic liquid which decomposes at boiling point can be purified by _____ method
(4) Beilstein test is used to detect _____ element in the organic compound
(5)Dumas method is used for the estimation of _____ element in the organic compound

B. Match A with B **05**

A	B
(1) Detection of 'N"	(a) Sublimation
(2) Oxidation of Primary alcohol:	(b) Silver mirror test
(3) Estimation of 'N'	(c) Lessaigne's test
(4) Detection of –CHO Gr.	(d) Kjeladahl's Method
(5) Purification of Solid Volatile compound	(e) Aldehyde

OR

B. Give the structure of product obtained during the following reactions (any five)

(1) $CH_3CHO \xrightarrow[KOH]{NH2\text{-}NH2}$ _____

(2) $CH_3CH_2Cl + KOH \xrightarrow{ETHANOL}$ _____

(3) $2CH_3CH_2Cl + 2Na \xrightarrow{Ether}$ _____

(4) $C_2H_5OH \xrightarrow[350^\circ C]{Al2O3}$ _____

(5) $CH_3CH_2OH \xrightarrow[CrO3\ /\ HAC\text{-}H2O]{[O]}$ _____

(P.T.O)

C. Give the Name of following Alkyl/aryl groups of **05**

(1) CH_3—— _____

(2) CH_3CH_2—— _____

(3) C_6H_5—— _____

(4) CH_3CHCH_3 _____

(5) CH_3O-- _____

D. Assign IUPAC Names of following compound **05**

(1) CH_3COCH_3 _____

(2) $CH_3CH{=}CHCH_3$ _____

(3) $CH_3CHOHCH_3$ _____

(4) 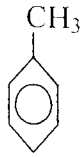

_____

(5) 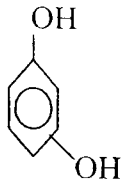

_____

Enrollment no.:-_____ Sign:-_____

DR. S. & S.S. GHANDHY COLLEGE OF ENGG & TECHNOLOGY , SURAT
G. T. U. INTERNAL EXAMINATION 9TH APRIL,2009

TIME: 1 HR. MARKS: 20

SUB: ELEMENTS OF CIVIL ENGINEERING (320007)

INSTRUCTIONS:

1) Write your no. immediately on ans. Book.
2) All questions are compulsory.
3) Figures to right indicates full marks.
4) Draw free hand sketch wherever necessary.
5) Use of mobile in examination hall is strictly prohibited.

Q.-1 Define the following terms **(Any five)** (05)

(1)Surveying (2)Ranging (3)offset (4)Fore bearing

(5)Back bearing (6)Whole circle bearing

Q.-2 Give the conventional signs for the following **(Any five)** (05)

(1)Chain line (2)Building (3) Metalled road (4)Tree (5) Temple

(6) Gate (7) Survey Station

OR

Q.-2 Write full form of following Abbreviations **(Any five)** (05)

(1) R C C (2) W.C (3)B.M (4) AGG. (5) BWK. (6) D.P.C (7) C/C

Q-3 Answer the following (05)

(1) Differentiate between Building-plan and Map
(2) Give points for selecting an Ideal location of Industry

Q.-4 Answer Briefly (Any two) (05)

(1) Give type of Ranging and Explain process of any one type of Ranging
(2) Describe the procedure for using Prismatic Compass
(3) List the instruments required for Chain and Tape survey

ENROLL. NO. -

Internal test
SUBJECT CODE: -320017
SUBJECT NAME: ELECTRONIC DEVICES AND CIRCUITS – I
Date: - 9/04/2009 Time: - 2:00 p.m. TO 3:00 p.m. Total Mark- 20

Instruction: -

- Write your enrollment no.
- Attempt all questions.
- Draw the Figure & circuit whenever necessary.

Q-1 Define following term any two (4)

1. Deplation layer
2. PIV
3. Break down Voltage
4. Diffusion current

Q-2 Answer the Short questions any three ` (6)

1. What is rectifier?
2. Differentiate semiconductors, conductor & insulator on basis of band gap
3. Why the temperature coefficient of resistance of a semiconductor is negative?
4. What is Zener breakdown? Explain.
5. Write equation of alpha & beta of transistor.
6. What is Clamping?

Q-3 Answer the following questions any two (10)

1. Explain Characteristics of P-N junction Diode.
2. Draw & Explain Bridge rectifier with waveforms.
3. Explain operation of NPN transistor.
4. Write technical note on Diode Clipper.

Enrollment no.:-_____ Sign:-_____

DR. S. & S.S. GHANDHY COLLEGE OF ENGG & TECHNOLOGY , SURAT
G. T. U. INTERNAL EXAMINATION 9TH APRIL,2009

TIME: 1 HR. 30 MINUTES **MARKS: 20**

SUB: CIVIL ENGINEERING DRAWING (320006)

INSTRUCTIONS:

1) Write your enrollment no. and name immediately on answer book.
2) All questions are compulsory.
3) Figures to right indicates full marks.
4) Draw free hand sketch wherever necessary.
5) Use of mobile in examination hall is strictly prohibited.

1. (a) Enlist different types of plans. 2

(b) Why combination of first angle and third angle projection method is used in Civil engineering drawing? 2

2. (a) Give Symbols for following: (any four) 2
(i) two-way slab, reinforced (ii) concrete (iii) revolving door
(iv) exhaust fan (v) buzzer (vi) bed

(b) Write abreviations for following: (any four) 2
(i) aggregate (ii) cross-section (iii) full supply level
(iv) railway (v) watt (vi) gully trap

(c) Write full form of following: (any four) 2
(i) MSL (ii) GL (iii) IC (iv) FH (v) hp (vi) BBLC

3. (a) Define: 2
(i) Built-up area (ii) coverage index

(b) (i) The front margin is _____m for road-width of 9m or less. 1

(ii) Types of circulation in building are _____ and _____. 1

4. Draw ground floor plan for following details. Assume North and Road direction. Plot area is 252 sq.m. and C.I. is 0.5 6
Drawing room, Kitchen, bed room, dining room, bath room, w.c., MBR

*****

Dr. S. & S. S. Ghandhy college of Engg. & Tech.

Majura Gate, Surat – 395 001.

Internal Retest :- II Sem. - D.T.P.T.

Sub.:- Fibre Science (320022)

Marks :- 20 Time : One Hour Enroll. No.:- _____

Signature of Supervisor : _____ Date: 09-04-2009 (Evening)

Instructions : 1. Write down your Roll No. on your question paper.
2. All questions are compulsory.

Q:1 Answer the following questions shortly : (Any FIVE) (10)

(i) What is addition polymers?
(ii) Define Count.
(iii) Define Denier.
(iv) What is Condensation Polymers?
(v) What is staple yarn?
(vi) Differentiate Nylon-6 and Nylon-66.
(vii) What is Degree of Polymerization (DP)?
(viii) Explain Tenacity.
(ix) Which are the necessary conditions for the formation of condensation polymers?

Q:2 (a) What is semi synthetic fibre? (02)
(b) What is the difference between Natural fibres and semi synthetic fibres? (03)

OR

Q:2 Explain the following steps of Viscose Rayon manufacturing: (05)

(i) Purification of Spruce wood.
(ii) Steeping process.

Q:3 Write Any Two: (05)

(i) Microscopic Examination of Nylon and Acrylic fibre.
(ii) Microscopic Examination of Cotton and Viscose Rayon.
(iii) Physical properties of cotton.
(iv) Chemical Properties of cotton.

X

DR. S & S. S. Ghandhy College of Engineering & Technology, Surat.

II-nd Semester (DTMT)
GTU Examination (Internal) April -2009

Singnature of Supervisor :_____ En. No._____

SUB- Fibre Techonology Sub Code :- 320021

Time : 01 Hrs **Marks :-20**

Q: 1 Give Classification of Textile Fibres. 10

Q: 2 Give **Chemical** Test of Following Fibres. (Any Three) 05

a) Cotton
b) Wool
c) Silk
d) Nylon
e) Polyester

Q: 3 Give Cross Sectional View of **Any Two** Textile Fibres. 05

****

Dr. S. & S. S. Ghandhy College of Engg. & Tech.
Surat

Mid Semester Exam:- April 2009
Gujarat Technological University

Subject code:- 320019
Subject :- Elements of Electrical & Mech. Engg. for Textile(DTPT/DTMT)
Date:- 09/04 /2009 **Time:-** 11:00 a.m. To 12:00 a.m.
Total Marks: 20

Enrolment No:_____ **Supervisor's dated Initial** _____

Instructions: (1) Write your Enrolment No. in the space provided on the given question paper immediately
(2)Use of Programmable calculator or any mathematical aid is strictly prohibited.
(3) Mobile is strictly prohibited in examination premises.
(4) Attempt ALL questions.
(5) Figures to the right indicate full marks.
(6) Write each section in Separate answer sheets.

Section – I (ELECTRICAL)

1) (a) Define following terms with respect to A.C. (Any **FOUR**) **(4)**

(1) Cycle
(2) Time Period
(3) Frequency
(4) R.M.S value
(5) Average value
(6) Form Factor

2) Answer any **TWO** **(6)**

(a) Draw STAR connection for 3 – Phase Circuit. Write equations for line voltage and phase voltage and line current and phase current.

(b) Explain construction and working principle of transformer.

(c) Derive the emf equation of transformer.

P.T.O.

SECTION-II

(MECHANICAL SECTION)

Q.3 Using steam table find following for 10 bar pressure. 5

(1) Specific volume & Enthalpy of wet steam of 0.95 dryness fraction.

(2) Specific volume & Enthalpy of superheated steam of 250°C temperature.
Take Cps = 2.1 KJ/Kg K.

OR

Q.3 (a) Write the modes of power transmission. Explain any one with figure.

(b) Write the industrial application of steam.

Q.4 (a) Write the function of following. **(Any three)** 3

1) Boiler 2).Pump 3).Compressor 4).Priming

(b) Draw neat figure of Reciprocating pump. 2

****

DR. S & SS GHANDHY COLEGE OF ENGG. & TECH. , SURAT

MIDSEMESTER EXAMINATION- APRIL 2009

SEMESTER II (ELECTRICAL)

SUBJECT :- ELECTRICAL CIRCUIT

Time :- 1 hour

Max. marks :20

Q-1 Define **ANY 4** of the following terms :- (04)

(i) RMS value

(ii) Average value

(iii) Form factor

(iv) Peak Factor

(v) Amplitude

(vi) Frequency

(vii) Time Period

Q-2 Derive formula for RMS current in terms of maximum current. (06)

OR

Derive formula for Average value in terms of Voltage. (06)

OR

Explain with suitable figure Cycle, Phase & Phase difference for the alternating quantity. (06)

Q-3 Compare electric circuit & magnetic circuit. (06)

OR

Write & Explain Faraday's laws of electromagnetic induction. (06)

OR

Write the laws of magnetic circuit. (06)

Q-4 Define **ANY 4** of the following terms :- (04)

(i) Flux density

(ii) Reluctance

(iii) MMF

(iv) Permeability

(v) Lenz's law

(vi) Flemings Left Hand Rule

(vii) Leakage Flux

BEST OF LUCK

Dr. S. & S. S. Ghandhy College Of Engg. & Tech.
Surat

Mid Semester Exam:- April 2009
Gujarat Technological University
DIPLOMA (IInd Semester)

Subject code:- 320004
Date:- 09/04 /2009
Total Marks: 20

Subject Name:- Fundamentals of Electrical Engg.
Time:- 11:00a.m. To 12:00 a.m.

Enrolment No:_____

Supervisor's dated Initial _____

Instructions: (1) Write your Enrolment No. in the space provided on the given question paper immediately
(2)Use of Programmable calculator or any mathematical aid is strictly prohibited.
(3) Mobile is strictly prohibited in examination premises.
(4) Attempt ALL questions.
(5) Figures to the right indicate full marks.

1) Define any **FOUR**: (4)

(1) Potential Difference
(2) M. M. F
(3) Flux density
(4) Permeability
(5) Reluctance
(6) Leakage Factor

2) (a) Define following terms with respect to A.C. (Any **FOUR**) (4)

(1) Cycle
(2) Time Period
(3) Frequency
(4) R.M.S value
(5) Average value
(6) Form Factor

b) Explain construction and working principle of Single-phase Transformer. (4)

3) Answer any **TWO** (8)

(a) Compare electric circuit and magnetic circuit.

(b) Explain how alternating emf is produced. Write down equations of ac Voltage.

(c) Derive the emf equation of transformer.

****

DR. S & S S GHANDHY COLLEGE OF ENGG. & TECH., SURAT

Time : 1 Hour **Subject :** Mechanical Drafting(SM/SMet 251) [**20** Marks]

Q-1 Fill up the blanks. (Any **TEN**) **5**

1) When an object is assumed to be cut through entirely and the front half removed, it is said to be in _____ section.
2) A rib is shown in section when a cutting plane cuts it _____its length and breath.
3) Generally section lines are thin continuous lines drawn inclined at ____ degree to the main outline of the section.
4) When a solid is cut by a plane parallel to its base, the remaining bottom portion is called _____.
5) When surfaces of solids are laid on flat surface, the figure obtained is known as _____.
6) Fillet weld is shown by _____ symbol.
7) The symbol for spot weld is _____.
8) Multi direction lay is shown by _____ alphabet.
9) The roughness grades N7 to N9 is shown by _____ symbol.
10) For development of cylinder of diameter 50 mm the stretch-out length is equal to _____ mm.
11) When the section plane is parallel to the V.P., the true shape will be visible in the _____.
12) Symbol for seam weld is _____.

Q-2 Draw the following views of object in Fig.1 according to first angle projection method. **5**

1) Sectional Front View on Y-Y
2) Missing Left Hand Side View

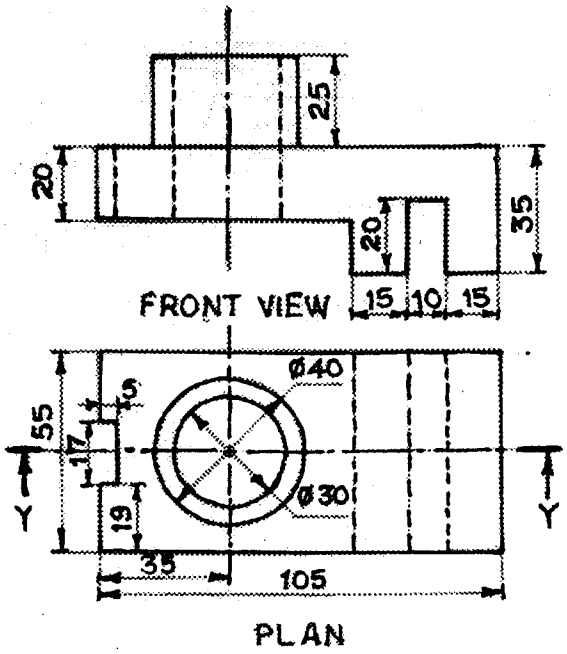

Fig. 1

Q-3 Draw the projection of a cube of 25 mm long edges resting on the H.P. on corner such that its body diagonal is parallel to the H.P. & V.P. both. **5**

OR

A pentagonal pyramid, of 30 mm side and 50 mm height, has its base on the H.P. and the edge of the base nearer the V.P., parallel to it. A vertical section plane, inclined at 45° to the V.P., cuts the pyramid at a distance of 6 mm from the axis. Draw the top view, sectional front view and the true shape of the section. **5**

Q-4 Draw the development of the lateral surface of Fig. 2 **OR** Fig. 3. **5**

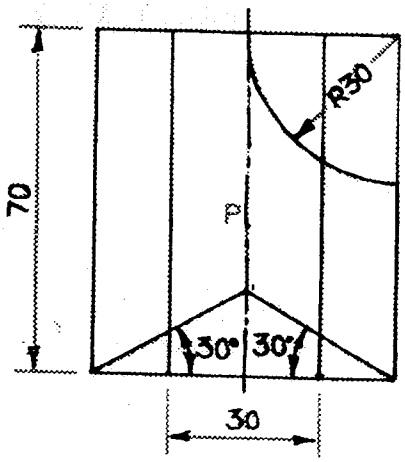

HEXAGONAL PRISM

Fig. 2

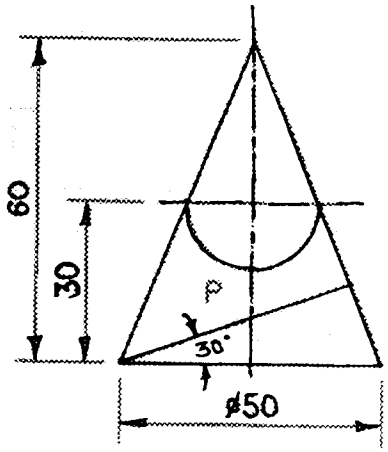

CONE

Fig. 3

----------x----------

GTU EXAMINATION
S-205 (*ELEMENTS OF MECH.ENGG.*)
FOR II SEMESTER DCE, DEE
MIDTERM TEST TIME: 1 HR MARKS: 20

Instructions: 1) Attempt all questions.
2) This question paper contains 5 questions.

Q.1 ATTEMPT ANY FOUR **(04)**

1. Define the term slip for belt drive.
2. Write the formula for the length of open belt.
3. What is solder? What is spelter?.
4. What is the function of injector for the I.C engine?
5. What is the boiler? What is the function of boiler?
6. List the various governing system for the I.C. engine?

Q-2 Drive the formula for the ratio of tension in the belt drive. **(04)**

OR

Q-2 Calculate the power transmission for the belt drive for the following. **(04)**

Tension for the tight side	: 2200 N
RPM of pulley	: 400 rpm
Co-efficient of friction	: 0.30
Angle of lap	: 165°
Diameter of pulley	: 1 m

Q-3. Explain T.I.G. Welding with neat sketch. **(04)**

Q-4. **1.** Differentiate between water tube boiler and fire tube boiler.
2. Differentiate between mountings and accessories

OR

Q-4 Explain cochran boiler with sketch. **(04)**

Q-5 **1.**Differentiate between Two stroke and four stroke I.C.. engine. **(04)**
2. Differentiate between Aircooling and Water cooling

OR

Q-5 Explain four stroke petrol engine. **(04)**

GUJARAT TECHNOLOGICAL UNIVERSITY
Dr. S & S S Ghandhy College of Engg. & Tech. Surat
Midsemester Examination

Subject : 320010 (Theory of Machine & Strength of Material)

Section-I

Q.-1. Define any three. **03**
i. Link or element
ii. Mechanism
iii. machine
iv. Structure

Q.-2. From the following data, draw the profile of a cam in which the follower moves with simple harmonic motion during ascent while it moves with uniform velocity during descent: **04**
Least radius of cam = 50mm; angle of ascent = 48°; angle of dwell between Ascent and descent = 42°; angle of descent = 60°; lift of follower = 40 mm; diameter of roller =30 mm;
line of action of follower passes through the axis of cam.

Or

Q.-2. Explain with neat sketches types of cams and followers.

Q.-3. What is the inversion of a slider crank mechanism? Explain any one with a neat sketch. **03**

Or

Q.-3. Define the following terms giving examples.
i. Lower pair and higher pair.
ii. Machine and mechanism.

Gujarat technological university
Diploma sem –II internal examination
Subject : S.M. T.M.(320010)

Total marks : 20 SECTION - II Time : 1 hour

Instructions : (1) Attempt all questions
(2) Figures to the right indicate full marks
(3) Make suitable assumptions whenever necessary

Q-1 (A) Define (2)
(1) stress (2) strain (3) Hooke's law (4) Modulus of elasticity

(B) A steel bar 20 mm in diameter and 3 mt. long is subjected to an axial tensile load of 60 kn load The increase in length is 1.8 mm. calculate the stress, strain and young's modulus. (3)

OR

(B) Find the change in length of the bar shown in the figure. The diameter of bar is 20 mm take $E = 2.0\times10^5$ N/mm^2 (3)

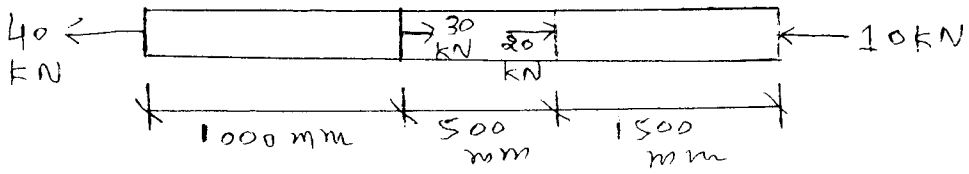

Q-2 (A) Define (2)
(1) Shear force (2) bending moment

(B) Draw S.F. and B.M. diagram for the beam shown in the figure (3)

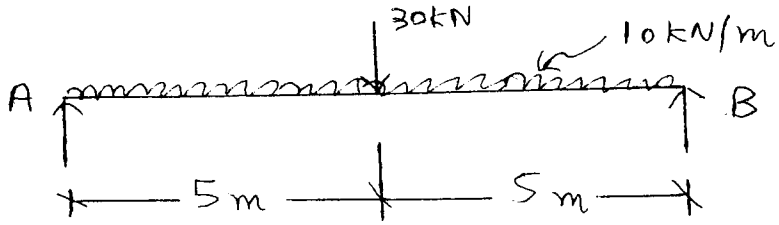

OR

(B) Draw S.F. and B.M. diagram for the beam shown in the figure (3)

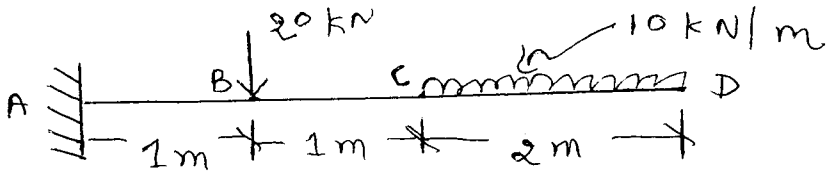

Dr. S. & S. S. Ghandhy college of Engg. & Tech.

Majura Gate, Surat – 395 001.

Mid Test :- II Sem. - D.T.M.T.

Sub.:- Statistical Quality Control (320020)

Marks :- **20** Time : One Hour Enroll. No.:- _____

Signature of Supervisor : _____

Instructions : 1. Write down your Roll No. on your question paper.

2. Attempt any **Four questions** .

Q:1 State Different Measures Of Central Tendency. Define any one. 05

Q.2 State any five S.I. Units. 05

Q.3 Draw Frequency Polygone from the following data 05

Class	0-10	10-20	20-30	30-40	40-50	50-60	60-70
Fre.	2	8	20	40	50	30	10

Q.4 Calculate Mean from the following data 05

Class	0-10	10-20	20-30	30-40	40-50	50-60	60-70
Fre.	3	10	15	10	8	3	1

Q.5 Calculate Mode from the following data 05

Class	0-10	10-20	20-30	30-40	40-50	50-60	60-70	70-80
Fre.	2	8	20	40	50	30	20	10

Q.6 State different measures of Disperssion.Define any one 05

Q.7 Calculate Mean deviation from the following data 05

X	10	11	12	13	14
F	3	12	18	12	3

Mid Test

II DMT

SQC

8/4/09

Enrollment No._____

DR. S & S.S GHANDHY COLLEGE OF ENGINERRING & TECHNOLOGY, SURAT

Gujarat Technological University

Mid-Semester Examination April-2009

Subject Name: Programming in C **Subject Code:**

Duration: 1 Hrs **Marks: 20**

Q-1 Fills in the blanks with appropriate words **(2)**

1. The keyword _____can be used to create a data type identifier.
2. _____ is the largest value that an unsigned short int type variable can store.
3. A global variable is also known as _____ variable.
4. A variable can be made constant by declaring it with the qualifier_____ at the time of initialization.

Q-2 Write program to read the price of an item in decimal form (like 15.95) and print the output in paise (like 1595 paise). **(3)**

OR

Q-2 Write program to select and print largest of the three numbers. **(3)**

Q-3 List four rules for naming identifier **(2)**

Q-4 Write Any **One** **(3)**

1. Give Classification of Data Type and Explain Fundamental data type in brief.
2. Explain switch statement with suitable example.

Q-5 Attempt Any **Three** **(6)**

1. What difference is between prefix and postfix operator?
2. Explain implicit and explicit type cast.
3. Differentiate between scanf() and putchar() function
4. Evaluate following expression.

   11/3 + (7/3) *3 -8%3

Q-6 Wrie a program to enter the numbers till the user wants & at the end it should Display the count of Positive, negative & zeros entered. **(4)**

OR

Q-6 Write output of following program

```
#include<stdio.h>
void main()
{
int a,b,c,d;
a=15; b=10;
c = ++a-b;
d= b++ +a;
printf("a=%d, b=%d, c=%d, d=%d", a ,b ,c ,d );
printf("a/b = %d\n",a/b);
printf ("a%b = %d\n", a%b);

}
```

--------BEST OF LUCK-------

DR. S. & S. S. GHANDHY COLLEGE, SURAT.
INTERNAL EXAM : April – 2009
SUB: - App.Sci-ii(chemistry) (320002)

8/4/09
11.00-12.00

En.Roll no:- _____ **Sign of supervisor: -** _____
Branch: _____

Fill in the gaps (any ten) **10**

A.(1) Shape of s-orbital is _____
(2) Capacity of an atom to attract the bonded pair of electrons is_____
(3) The device that converts the energy of chemical reactions in to Electrical energy is called _____
(4) The oil varnish is a mixture of _____ and _____
(5) Monomers used in the manufacture of Nylon6,6 is_____and _____
(6) Alumina and Magnesia are example of _____refracteries
(7) Glass wool and thermocole are _____materials
(8) Nylon6,6 is formed _____ polymerization reaction
(9) Molyblednum disulphide is _____ lubricant
(10) The rate of change of viscosity of a lubricant with change in temperature is known as _____
(11) Crevices corrosion is example of _____
(12) Electrode at which Oxidation takes place. is called_____
(13) Down the group. ionization energy _____with increase in atomic number
(14) Value of first ionization energy is _____ than second ionization energy
(15) The no. of neutrons in the atom of $_{11}Na^{23}$, is _____.

B **05**

Answer the following questions

(1) Write electronic configuration of $_{17}Cl^{35}$
Ans: _____

(2) Explain complete meaning of $_{92}U^{235}$
Ans_(a)_____ (d)_____
_(b)_____ (e)_____
_ (c)_____ (f)_____

(3) List the type of type of chemical bonds
Ans:_(a)_____ (d)_____
(b)_____ (e)_____
(c)_____ (f)_____

(4) Atomic Mass number is defined as
Ans:_____

(5)Give the two characteristics of Adhesives
Ans:_____

(P.T.O)

D. **Match the items of A with B** **05**

A	B
(1) Atomic number	(a) Thermoplastic material
(2) P.V.C	(b) solid lubricant
(3) Bakelite	(c) sum of protons and neutrons
(4) Graphite	(d) Number of protons in the nucleus
(5) Glass wool	(e) Thermosetting Material
	(f) Insulating material

GUJARAT TECHNONOLOGICAL UNIVERSITY

MID SEMESTER TESTAPRIL-09

DR S.S.GHANDHY COLLEGE OF ENGG. & TECH. SURAT

SUBJECT CODE : 320005 **SUBJECT : NCES MAX. MARKS :20**

Q-1 Fill in the blanks 10

1. Total radiation = ----------radiation + ----------radiation.
2. ----------is an instrument to measure solar radiation.
3. In photovoltaic cell ----------metal is used.
4. Photovoltaic cell converts ----------energy in to ----------energy.
5. ----------&----------are good example of semi conductors.
6. Efficiency of silicon solar cell is ----------%.
7. Feel factor of solar cell is ----------.
8. ----------is used to make distilled water.
9. Moving air is called ----------.
10. Aerogenerators converts ----------energy in to ---------- energy.

Q-2 Write any two 10

1. Differentiate between conventional & non-conventional energy sources.
2. Define wind energy &classify wine mill in detail.
3. Describe construction & working of flat plate collector with neat diagram.
4. Describe effects of terrestrial zone on solar radiation with neat diagram.

DR. S. & S. S. GHANDHY COLLEGE, SURAT. **Roll no: - _____**

INTERNAL EXAM–APRIL–2009 **Sign: - _____**

SECOND SEMESTER

SUB: - Mathematics - II (201) (320001)

Time: - 1 hour **Marks: - 20**

Instructions :- 1) Figures to the right indicate full marks.
2) Use of programmable calculator is strictly prohibited.

Q.1:– Fill in the blanks by choosing correct answer. **[5]**

1) If P (1, 2) & Q (2, 3) then PQ = _____.
(a) 1 (b) 3 (c) 2 (d) 4

2) $\lim_{x \to 0} \frac{7^x - 1}{x}$ = _____.
(a) log7 (b) $\log x^7$ (c) $\log 7^x$ (d) logx

3) The angle between to straight lines is Φ = _____.
(a) $\tan^{-1}\left|\frac{m_1 + m_2}{1 - m_1 m_2}\right|$ (b) $\tan^{-1}\left|\frac{m_1 + m_2}{1 + m_1 m_2}\right|$ (c) $\tan^{-1}\left|\frac{m_1 - m_2}{1 - m_1 m_2}\right|$ (d) $\tan^{-1}\left|\frac{m_1 - m_2}{1 + m_1 m_2}\right|$

4) $\frac{d(3)}{dx}$ = _____.
(a) 3 (b) 0 (c) 1 (d) (-1)

5) If $f(x) = x^2 + 2x - 2$ then $f'(3)$ = _____.
(a) (-15) (b) (-13) (c) 13 (d) 15

Q.2 – solve the following. (Any 5) **[15]**

1. Prove that the points (1, 4), (3, -2) and (-3, 16) are collinear.
2. If the vertices of a triangle are (3, -4), (-2, 5) and (5, 2) then find the centroid of a triangle.
3. Find the slop and intersects at 2x – 3y + 5 = 0.
4. Find the equation of a straight line passing through the points (1, 6) and (-2, 5) and find the slop.
5. Find $\lim_{x \to 0} \frac{e^x + \sin x - 1}{x}$
6. Find $\lim_{x \to 2} \frac{x^2 - 4}{x - 2}$
7. If $y = a(1 + \cos\theta), x = a\sin\theta$ find $\frac{dy}{dx}$
8. $y = \frac{x^4}{4} + 3x + e^{2x} + iog3$ find $\frac{dy}{dx}$

..... BEST OF LUCK .....